THEORY OF MAGNETIC METHODS OF APPLIED GEOPHYSICS WITH AN APPLICATION TO THE SAN ANDREAS FAULT

By

Joshua Lawrence Soske

A thesis presented to the Balch Graduate School of Geological Sciences, California Institute of Technology, in partial fulfillment of the requirements for the degree of Doctor of Philosophy.

Pasadena, California

1935.

CONTENTS

Contents continued

ILLUSTRATIONS

ILLUSTRATIONS Continued

INTRODUCTION

The attempts of geological and mining engineers to decipher the structure of the outermost formations of the earth's crust have lead to many comprehensive studies, which now stand as monuments to their efforts. Their studies, in general, are confined almost exclusively to systematic collection, description, and analysis of facts which they were able to obtain by immediate observation at accessible points on and near the surface of the earth. These observations have many times been supported by other researches carried on in chemical, physical, and petrographic laboratories, but many times the complete solution of the problem has been obtained by inference. This often means that only those facts which could be seen were considered a safe basis for the inferred technical conclusions reached by a process of deduction.

A disadvantage of this direct method of investigation lies in the fact that such observations can be made only at certain points where nature has provided especially favorable conditions. The seriousness of this disadvantage has stimulated attempts in the past to develop methods which do not demand direct contact with the subsurface material for the investigating of geological structure, mineral content, and the nature of subsurface formations. Only recently have these methods been developed into usable forms. They are based upon those properties of the minerals, associated minerals, rocks, or structures which produce effects observable at a distance.

Therefore, in order that these methods of geological investigation succeed, it is necessary to attach to them all the resources of modern physics or geophysics, which may lead to the determination of the range of practical application of the known physical properties of matter connected with distant effects. This requires a constant improvement of methods and continuous new design of apparatus to keep abreast with new knowledge and ever increasing difficulties in the field as the more simple relations are learned, and the more complex relations left for study.

HISTORICAL NOTES

Geophysics, as may be surmised, is the physics of the earth, that is, the study of the physical laws under which the earth was formed and now exists, together with the physical properties of the earth and its materials. The earliest philosophers were concerned with the history of the earth, its constitution, and mechanics. These early thinkers knew many of the now well known physical laws, and thus, the science of geophysics may be considered one of the oldest, instead of one of the newest sciences. Applied geophysics, with which we shall deal in this discussion of earth magnetism, is the science of applying pure geophysics to the discovery of useful information and in some cases to the finding of useful deposits in the earth. Applied geophysics, however, is a comparatively new branch of geophysics, its development taking place within the last fifty five years and largely within the last decade.

Magnetism seems to have been known to the Chinese before the beginning of the Christian era, and to have been known to the Greeks as early as 546 B.C., for it is mentioned by Thales. The compass was used in Europe by the end of the 12th century, and was used in navigation by the end of the 13th century. It was not long until it was recognized that the compass did not always point in the astronomic north-south and that the declination was different for different places. Instruments for the determination of the declination were invented as early as 1525. The inclination of the compass was noted by Hartmann of Nuremburg in 1544, but Robert Norman of London was the first to devise an instrument for its measurement (1576) and was the first to publish a treatise on the subject (1581); Gilbert (1600) performed many experiments with magnetism and recognised that the earth was a great magnet. The secular variation of the declination was first noted and published by Gellibrand (1634) and Tachart of Siam was the first to observe the diurnal variation. However, Graham of England was the first to take extensive observations of the diurnal variation of declination (1722). Mallet in 1769 determined the intensity of the earth magnetic field by observation of the period of an oscillating compass needle, his method giving relative values only. Poisson (1828) conceived the idea of a fiber-suspension magnetometer for absolute measurements of intensity which was constructed in 1832. Crude earth-inductors which gave the direction of the earth magnetic field were employed by Weber in 1837.

The application of magnetic methods to the finding of ore deposits is probably one of the oldest methods of geophysical investigation. According to Sunberg, Lundberg, and Eklund[1] the compass has been used for prospecting purposes in Sweden for more than

---

[1] K. Sunberg, H. Lumberg, and J. Eklund, Electrical Prospecting in Sweden, Sveriges Geologiska, Ser. C., No. 327, 1925 (Stockholm)

250 years. The first publications were dated 1760. The first Swedish mining compass is thoughtto have been invented by Tilas in 1772. In 1879, Professor Robert Thalen, a Swedish scientist, published the result of this work of magnetometric surveying of ore deposits. Tiberg in 1880 invented an inclinator by which horizontal and vertical intensities could be measured. Dahlblom, another Swedish engineer, invented a magnetometer in 1898 and a new design in 1904. In 1899, Professor Thalen gave instructions for the construction of a vertical intensity variometer. This instrument was called the Thomson-Thalen magnetometer and for a considerable length of time these instruments were the standard for magnetic investigations.

In the United States, magnetic investigations were being employed as early as 1874. In 1876 an article by Smock[2] appeared on magnetic methods of investigating the presence of magnetic iron minerals. The following is a quotation of a portion of a paragraph taken from Smock's article written in 1874: "In the Highland range from the Hudson to the Delaware Rivers, the ordinary method of running line with the compass is sometimes impossible and property boundaries are located by well-established landmarks, rather than by the course of the needle. Notwithstanding these well-known facts, the general application of this property of deflection in the needle, by the presence of magnetite, to searches for this mineral, is comparatively of recent date. There are, however, authenticated instances of this use of the magnetic needle more than a century ago. The mining of iron ore in the Highlands began in the early part of the eighteenth century, and the Sterling, Ringwood, Dickerson, Andover, and Oxford

[2] J. C. Smock, The Use of the Magnetic Needle in Searching for Magnetic Ore, Transactions, A.I.M.E., vol. 4, p. 353, 1876.

Furnace Mines were all worked before the American Revolution. And these, with other old mines of this district must have been opened shortly after the location of the larger patents and tracts of land, and the settlement of the country. And some of the ore masses, were most probably discovered through disturbances observed in the action of the needle in making surveys. This may have suggested the employment of the compass in searches for ore. Such use of the needle was made by the Celebrated London Company, that took up the ringwood tract. This company surveyed the country with thoroughness and success. And nearly all of the older and larger mines in this Highland belt are commonly reported to have been discovered through use of the compass, in searches for ore."

Magnetic measurements have been applied extensively in the search for magnetite bearing rocks in the United States since Smock's time, and these methods have also been used with success in the search for placer gold by locating the associated concentrations of black sands consisting mainly of magnetite grains.

A large amount of magnetic surveying was done by the Geological Survey of Canada and a good article on the work was published by Haanel[3].

At first, magnetic measurements were applied only to the detection of magnetic minerals, and the earliest more or less full statement of the magnetism of the minerals is to be found in an article by H. Tasche in Jahrbuch der Kaiserlich-Koniglichen Geologischen Reichaanstalt, VIII, Jahrgang, 1857.

[3] Eugene Haanel, On the Location and Examination of Magnetic Ore Deposits by Magnetometric Measurements, Department of Mines, Ottawa, Canada.

It was not until Schueck of Germany in 1898 called attention to the negative magnetic anomalies over chalk deposits and Schuh also of Germany in 1920 called attention to the negative anomalies over salt domes, that magnetic methods were applied to the working out of geologic structure. But since magnetic anomalies in sedimentary areas are often of a very low order, magnetic methods were not extensively applied until the appearance of more delicate magnetic instruments.

Sensitive, yet rugged, magnetometers were designed by Schmidt in 1915 and these instruments were used extensively in Europe. It was not until after Schmidt's instrument had been improved in 1924, that these precision instruments were introduced into the United States. In December 1925 there were only a few such instruments in this country, but it was soon discovered that the buried granite ridge structure near Amarillo, Texas, and other similar geologic occurrences associated with oil deposits could be detected and accurately outlined with these instruments. And since 1925 these instruments have helped in no small way in the development of the Panhandle of Texas, Western Texas, Southeastern New Mexico and other areas.

In 1932 a new magnetic system was designed for the Ad. Schmidt magnetic variometers. This new system has a compensating feature for temperature changes, which make it possible to obtain reliable results for a great variety of latitude, scale value, and temperature conditions.

PART I

TERRESTRIAL MAGNETISM

It is recognised by all that the rocks of the earth contain magnetic materials in varying amounts. This is in strict agreement with the findings of Faraday, i.e., he announced for the first time that all substances are more or less susceptible to magnetism. The first magnets were elongated pieces of magnetite, and usually, although not always, the magnetic strength of a rock will be proportional to the amount of magnetite or other strongly magnetic mineral present.

For theoretical purposes any magnetic mass may be regarded as being composed of a large number of elementary magnets, and the total effect may be regarded as the summation of the effects of the elementary magnets. The attraction which a magnet causes at a given point will depend to a large extent upon the orientation of the magnet with respect to the point.

In contrast to the force of gravity which influences all bodies in proportion to their density, every body on which the magnetic force acts is polarized, and the diametrically opposite parts of the body are influenced in opposite directions. In a homogeneous magnetic field, however, no translatory force, but a torsion moment is exercised on all magnetized bodies.

The magnetic field of the earth varies in direction and intensity from place to place on the earth's surface and thus three quantities are needed for its complete specification. These three quantities are variables which are affected not only by the position of the point with reference to the longitude and latitude, but also by the rock materials and the orientation of the rock forming minerals.

The Earth as a Magnet

In general the earth acts as a large spherical magnet. A uniformly magnetized sphere is called a "terrella" and its magnetic axis is the line joining the two magnetic poles. The position of the poles and direction of the axis depends upon the direction of the magnetizing field. The magnetic axis of the earth does not coincide with the axis of rotation and does not pass through the center of the earth. In 1906 the Magnetic North Pole was near Boothia Felis at the latitude 71° north and longitude 96° west of Greenwich. This point is nearly directly north of Oklahoma City. The Magnetic South Pole was determined by Shakleton to be at latitude 72° 55' south and longitude 155° 16' east of Greenwich, near South Victoria Land. A magnetic pole of the earth may be defined as a point where the dip needle will be vertical. For practical purposes this is really an area instead of a point. At the poles the horizontal intensity is zero and the vertical intensity is large, but the vertical intensity is not a maximum value either positive or negative at the poles. The magnetic poles of the earth do not have the characteristics of the poles of a bar magnet. If they had, there would be an enormous increase in intensity upon approaching them, which is not the case. As stated above they are not even points of maximum intensity, there being four areas, two in each hemisphere, where the total intensity is greater. As far as is known at present, the maximum vertical intensity is at a point in northeastern Siberia.

If we assume a short magnet at the center of the earth with its magnetic axis lying along that of the earth, we can nearly approximate the effects observed at the surface.

Composition of the Earth's Magnetic Field

The three quantities necessary for the complete specification of the earth's magnetic field are called the magnetic elements for a certain place. The standard letters used to indicate these quantities are H, D, and I; H represents the horizontal magnetic intensity, D the declination, and I the inclination. The vertical component, Z, is sometimes used instead of one of these elements in specifying the earth magnetic field. The H and Z components can be resolved into one vector called the total intensity by the formula

$$T = \sqrt{H^2 + Z^2} \tag{1}$$

The total intensity T is generally of the order of half a gauss, the horizontal intensity H ranges up to 0.4 gauss, and the vertical intensity ranges up to 0.5 gauss. The declination for most parts of the earth's surface ranges between +20° and -20°. The inclination varies from +60° to 70° in the United States and central Europe, and is considered negative in the southern hemisphere, as the south seeking end of the needle points in the downward direction.

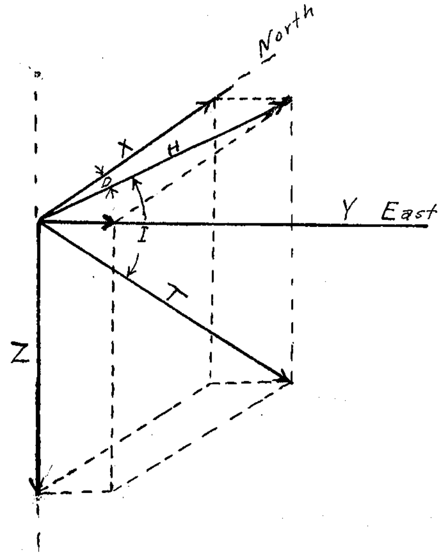

Vectorial Composition of Earth's Magnetic Field

Fig. 1

Sometimes it is convenient to use the X, Y, Z system in the discussions of geophysical measurements and for the convenience in going from one system to the other, a number of transformation formulae have been worked out from Fig. 1. These follow without further discussion.

$$X = H \cos D \quad (2)$$

$$Y = H \sin D \quad (3)$$

$$\tan D = \frac{Y}{X} \quad (4)$$

$$X = H \sin I \quad (5)$$

$$Z = T \sin I \quad (6)$$

$$H = \sqrt{X^2 + Y^2} \quad (7)$$

$$H = T \cos I \quad (8)$$

$$T = \sqrt{X^2 + Y^2 + Z^2} \quad (9)$$

$$T = \frac{H}{\cos I} \quad (10)$$

$$\tan I = \frac{Z}{H} \quad (11)$$

The earth's magnetic field is the resultant of several other fields. In other words, we may say that the total intensity T is composed of three separate and distinct fields. These fields are first, the internal potential field due to internal causes constituting 94% of the total earth field, second, the external potential field coming from sources outside of the earth, i.e. electrical currents flowing through the atmosphere, constituting 3% of the earth field, third, the non-potential field, constituting about 3% of the earth field. The non-potential field is perhaps due to charged particles in the air, which if they move, would cause the same effect as a current; but there is neither current nor potential.

Origin and Causes of Terrestrial Magnetism

There are several theories as to the origin and causes of terrestrial magnetism, the details of which are far too many to give here. However, an attempt will be made to give an outline of a few of the more important theories.

The Permanent Magnetization of the Earth Theory

Under the theory of permanent magnetization, the earth is regarded as a large spherical magnet. Bauer, in Terrestrial Magnetism and Atmospheric Electricity, vol. 28, pp. 1-28, 1923, computed the moment of the earth as a magnet considering it in the direction of the axis of rotation and obtained

$$M_p = 0.3047 R^3$$

M_P is the moment along the polar axis and R is the radius which is equal to 6.37×10^8 cm. This gave a value of 7.88×10^{25} c.g.s. units for M_P. The equatorial moment M_E was also computed giving a value of $0.0618\ R^3$, or 1.60×10^{25} c.g.s. units. These values were used to calculate the total moment, M_T which amounted to 8.04×10^{25} c.g.s. units. With this value and knowing the volume of the earth we can compute the average intensity of magnetization which is

$$\frac{\text{Total moment}}{\text{Volume}} = 0.074 \text{ c.g.s. units.}$$

This figure of 0.074 c.g.s. units is a very small figure, but when we consider that beyond a depth of 20 kilometers there is probably no more magnetic material, the figure becomes much larger because the magnetic material then considered is only a shell 20 kilometers thick. This gives a value of 0.563 c.g.s. units, which is a reasonable figure for the intensity of magnetization. The assumption that there is no magnetic material beyond 20 kilometers in the earth's crust is a result of the idea that the temperature of the earth's interior increases with depth and that at a depth of 20 kilometers the temperature is such that magnets cannot exist.

There are two main points in favor of this permanent magnetization theory; first, its simplicity, and second, that the calculated intensity is sufficient to produce the earth's magnetic field.

Against this theory is first, that if we assume a permanent magnetization, we must assume an external field to cause it; and, second, in order for the earth to retain its magnetism, we would have to assume a high degree of retentivity which is rather difficult to correlate with the variations we have; and third, the sun has a strong magnetic field, yet its temperature is much beyond that at which we think that magnets can exist, thus the mere increase of temperature with depth of the earth's crust does not seem to warrant the conviction that the material beyond 20 kilometers is not magnetic. However, the magnetic field of the sun may be caused by some electrical phenomenon.

Electromagnetic Theory

In the electromagnetic theory the earth is considered as an electromagnet, that is the earth's magnetic field is produced by electrical currents. Unfortunately few sets of earth current measurements have been made, the only complete current measurements being made at the Observatoria del Ebro, Totyosa, Spain.

In general it was found that quiet days were recorded simultaneously for both the earth current potential gradient recording and for the magnetic recording. In comparing the curves a similarity was noted but there were differences which seemed to exist in nearly all cases. When a maximum had been reached by one component the other had not reached it yet. The best fitting curves are those for vertical intensity, but as a whole the earth current potential gradient curves lag behind the magnetic effect; therefore, if there be a relationship it would be suggestive of the earth current being produced by electromagnetic induction during the fluctuations of the magnetic field. Bauer concluded that they are not cause and effect, but possibly the result of a common cause.

Rotation of the Earth in a Cosmic Magnetic Field

The theory that the earth is rotating in a cosmic magnetic field requires the assumption that space is a strong magnetic field and that the rotation of the earth in it causes electric currents which in turn cause the magnetic field. Objections to this theory are the same as those for the electromagnetic theory, that is, the variations in earth current potential gradient lag behind the magnetic variations.

Rotation of a Charged Sphere

If the earth is assumed to be originally charged, then its rotation would cause currents that in turn would create a magnetic field. However, the rotation is found to be insufficient to cause a field of intensity equal to that of the earth, and also the field would have to be symmetrical in respect to the axis of rotation.

In the case of separated charges we may assume that the earth is neutral due to the inside being positive and the outside negative. The rotation of the charged sphere would cause a field which could be responsible for a field of the required size, but again the lack of coincidence between the magnetic and rotational axes is against such a theory.

There are other theories such as the rotation of oriented crystals within the earth which might account for the earth's magnetic field, but in general their objections are so numerous that they will not be reviewed here.

Variation of the Earth's Magnetic Field with Latitude and Longitude

If we consider the earth as a magnetized sphere we could assume it as composed of magnets. For practical reasons we may call these small magnets magnetic elements, and since only the outer shell of the earth can be considered magnetic we have to deal with two hemispherical shells. With these assumptions, Gauss's potential formula for the earth's magnetic field has been developed. The derivation of this formula is complex on account of the necessity of using two spherical harmonic series. This formula can be applied only when considering the internal part of the earth's magnetic field, because none of the terms in the derivation are based upon the existence of the external field. The formula for the magnetic potential for a point on the surface of the earth is:

$$V_i = \frac{g_i^o \sin \phi + (g_i^! \cos \theta + h_i^! \sin \theta) \cos \theta}{R} \qquad (12)$$

g_i^o, $g_i^!$, and $h_i^!$ are coefficients derived for any point on the earth's surface and are called the Gaussian constants. ϕ is the latitude and θ is the longitude measured positive always to the east. If observations were made at points equally distributed over the whole surface of the earth there would be no error in the determinations of the Gaussian constants, but since such is not the case the Gaussian constants may be derived accurately for a locality but they cannot be applied exactly to other places. In general the Gaussian coefficients represent the earth's field as that of a magnetized sphere whose moment may be given by the formula

$$M = (g_i^{o^2} + g_i^{\prime 2} + h_i^{\prime 2})\, R^3 \qquad (13)$$

The values of the Gaussian Constants have been determined by several workers as is shown by the following table:

Table 1.

Year	Worker	g_i^o	$g_i^\prime$	$h_i^\prime$
1829	Erman-Peterson	+0.32007	+0.02835	-0.06011
1880	Adams	+0.31611	+0.02470	-0.06071
1880	Adams	+0.31684	+0.02427	-0.06030
1885	Schmidt	+0.31735	+0.02356	-0.05984
1922	Bauer	+0.30468	+0.02202	-0.05776

The first three workers are European and the data used was chiefly European, thus the values in the above table cover the area around the earth between 60° south and 68° north latitude. If one uses these values to calculate the earth magnetic moment, one finds indications that the moment of the earth has decreased by 1/1500 part. But this may be due to the fact that the values of the constants have been better determined with the increased range of stations.

It is important to remember that all these formulae do not represent the actual values but merely the order of the various magnetic elements.

For theoretical purposes Bauer has derived formulae for the three components of the earth's magnetic field. In this derivation Bauer has made the assumption that the earth is a sphere uniformly magnetized in a direction inclined to the axis of rotation. These formulae can be used to determine the order of the components for a point not far distant from some known point. In general it might be said that the following formulae will give values including the regional magnetic anomalies but if local magnetic anomalies are present there will be a corresponding difference between actual values and the values calculated by the use of the formulae

$$X = X_i + k_1 \cos \theta + K_1 \sin \theta + k_2 \cos 2\theta + K_2 \sin 2\theta + \ldots \quad (14)$$

$$Y = Y_i + m_1 \cos \theta + M_1 \sin \theta + m_2 \cos 2\theta + M_2 \sin 2\theta + \ldots \quad (15)$$

$$Z = Z_i + n_1 \cos \theta + N_1 \sin \theta + n_2 \cos 2\theta + N_2 \sin 2\theta + \ldots \quad (16)$$

The coefficients k, K, m, M, n, N, etc., are derived from observations made in the region to which the formula is to apply. X_i, Y_i, and Z_i are values of the components at the known station (i).

The above formulae are written in series form and consequently are cumbersome to use in practical field work, but on the other hand for extreme precision they can be used to advantage if the proper number of terms is used.

For actual field use the following equation called Liznar's equation is more applicable:

$$E_x = E_o + a \phi + b \theta + c \phi^2 + d \theta^2 + e \phi \theta \quad (17)$$

E_o is the value of any one of the magnetic elements at a known base station. E_x is the corresponding value for the unknown station and ϕ is the difference in latitude and θ the difference in longitude between the base station and the new station (x); a, b, c, d, e, are constants. In local magnetic surveys we can drop the second power terms of Liznar's equation. For example, if a and b are 6 and 3 gammas per mile respectively, and ϕ and θ are 6 and 4 miles respectively, then the vertical intensity,

$$Z_x = Z_o + 6x6 + 3x4 = Z_o + 48$$

In this way one may compute the theoretical value for a new station in advance of the measurement of the particular magnetic element considered. In comparing this theoretical value with the actual measured value, we may find a difference. This difference is called the magnetic anomaly and in general may be attributed to the change in susceptibility of material in the vicinity of the newly measured station.

Variation of the Earth's Magnetic Field with Time

At any place the values of the magnetic elements vary with time. The secular variation is presumably periodic, but the time over which these measurements have been made is not sufficient to be conclusive on this point. However, the differences are such they cannot be attributed to the improving of instruments, though some of the elements have only changed very slightly. The declination is easily obtained with accuracy and the instrumental error is insignificant as compared with the secular variation. As an example, one may cite the value of the declination at London, which was + 11° in 1580, gradually decreased and passed through the value zero, attained a negative maximum of -24° in 1815, and is now about -13°.

This variation is so gradual, that it takes a very long period of time for a very large change to take place, and consequently it does not affect the results of a modern magnetic survey unless the survey is to be compared with a very old survey over the same ground.

Table 2

Annual Secular Changes, Jan. 1, 1901

Place	Declination in minutes	Inclination in minutes	Horizontal Intensity.
Potsdam, Germany	-4.2	-1.6	16γ
Kew, England	-4.2	-2.2	25
Greenwich, England	-4.0	-2.2	23
Hong Kong, China	+1.8	-4.3	45
Rio Janeiro, Brazil	+10.4	-2.3	--

The above table illustrates that the amount of secular change will depend upon the geographic location. There will be a line of no secular variation on a map giving the amount of secular change for the whole earth. This line of secular variation in the United States is moving eastward, and the same is true for the agonic line.

Formulae have been developed for the computing of the amount of secular change and the various values of the magnetic elements, but since they are not important in applying the magnetic method to geological problems, they will be omitted. The works of Schmidt may be cited as a reference to these formulae.

It might be added that the cause of the secular variation is not well known, but some of the workers believe that there exists an external force which either adds to the magnetic element or acts against it, causing the variations.

The diurnal variation in the declination and the inclination is of the order of a few minutes of arc, and in intensity usually from 10 to 70 gammas.[4] In doing the magnetic field work the diurnal variation must be eliminated from the final results. The best solution of the problem is in the establishing of a temporary terrestrial-magnetic station in the area where the magnetic methods are in progress, so that the variations in intensity may be recorded uninterruptedly while the field observations are being made. A second solution which is often practiced, is to use the field instrument as a combined recording and field instrument; this merely requires repeating observations at a base station as often as the accuracy of the work demands in order to obtain the hourly progress of the diurnal variation. With these repeated observations a diurnal variation curve can be drawn which will yield the approximate background readings needed for correcting the field station values for the magnetic variations occurring during the progress of the day.

Most of the magnetic intensity anomalies in the states of New Mexico, Kansas, Oklahoma, and Texas are 300 to 500 gammas and thus neglecting the diurnal variations would not affect the qualitative results, but in regions where the anomalies are of a very low order much care must be taken to correct accurately for the diurnal variation.

There are two explanations of the diurnal variations which will be only treated briefly in this paper. The first theory is that the changes occur with the position of the sun due to ionization of certain gases in the atmosphere which will in turn cause variations

---

[4] J. L. Soske, Diff. in Diurnal Var. of Z. in So. Calif. Terr., Mag. June 1933.

in conductivity of the atmosphere, thus giving rise to changes in the flow of atmospheric electricity. The second theory assumes that there are ionized layers in the atmosphere, and that they are more or less tidal under the influence of the sun. The tidal action in the atmosphere changes the position of the atmospheric currents and thus causes the different magnetic effects on the surface of the earth.

The difference in the two theories is that the first varies the atmospheric currents and the second varies the position of the same.

Magnetic Storms

Magnetic storms are the rather erratic variations in the earth's magnetic field. In general they may be characterized as irregular, sudden disturbances, in which the intensity may vary by a few hundred gammas. These disturbances seriously affect magnetic surveying unless very careful observations are recorded during the storm.

There are three main types of magnetic storms, and it is important to distinguish among the types because in magnetic field work it is necessary to evaluate the work done during storms and to predict the probable effect in the progressing of work during a storm period.

The oscillatory type is characterized by relatively small amplitude and consequently this type does not affect magnetic surveys very much unless the anomalies are very small; and in the case of small anomalies there is little or no effect if continuous background readings are taken during the time of field observations. In general the oscillatory type of storm is merely small pulsations of the earth's magnetic field.

Sudden Commencement magnetic storms are a second type. They are characterized by occurring all over the world at approximately the same time. There are no pulsations in the earth's magnetic field, but a magnettometer will change readings by hundreds of gammas in an interval of a few minutes. It is obvious that this type of storm makes magnetic measurements of little value, if the measurements are made for the purpose of determining the magnetic intensity.

The third type of magnetic storm is called the bay type. It is a progressive one, recognized by a pronounced rise or drop in the value of the magnetic elements, and not associated with pulsations or sudden jumps. The bay type of storm often repeats on days following the first disturbance and occurring at about the same time of the day. This type of a strom may also render values of the magnetic elements affected useless, if measured during the progress of the storm. If the magnitude and time progress of the storm is known, corrections can be applied to the observations made during such disturbances, but as a rule the values should be checked.

Taken in general, all types of storms do not affect all the magnetic elements. The oscillatory type occurs usually in declination and horizontal intensity, giving rise to changes of 0.5 minutes of arc in declination and 5 to 10γ in horizontal intensity; but rarely does the oscillatory type affect the vertical intensity. The period of oscillation is from 2 to 10 minutes. The sudden commencement type is often recognized by a sharp rise in value from the normal, usually a small preliminary drop is noted, and following the drop the high peak value is reached within 2 or 3 minutes. The jump in value is often as much as 200γ and sometimes 400, 500γ or more. They may come once or twice a month, and they affect declination, horizontal intensity, but rarely the vertical intensity. Bay type storms are regarded by some as due to a condition in the atmosphere.

In addition to the above mentioned types, we have some that are peculiar to higher latitudes and in such latitudes there is an increase in number and amplitude of magnetic storms.

Magnetic storms are usually recognised by stationary recording instruments such as are maintained by the U. S. Coast and Geodetic Survey or by anomalous results obtained while applying magnetic methods to geological problems. The U. S. Coast and Geodetic Survey may send by agreement a telegraphic message advising when a storm is in progress and the intensity of the storm, they will also send a monthly report covering the sudden commencement storms, which is a service well worth investigating for any one doing magnetic work.

When sun spots are at a maximum usually ~~at~~ maxima of magnetic storms occur, and since this phenomenon has been observed rather often, though the relationship between sun spots and magnetic storms is not understood, magnetic observers are always on the alert for storms during sun spot periods. Large magnetic storms may be accompanied by large numbers of sun spots, or large individual sun spots, unusually large Aurora Borealis visible at low latitudes, marked variations in atmospheric electricity and earth currents, interruptions of telegraph and telephone service, and changes in atmospheric pressure.

If a strong magnetic storm occurs while magnetic field work is in progress, it might prove profitable to look for another to occur in about 26 or 30 days from the time of the first. The basis for the above is a theory that the existence of a strong flow of magnetism from a certain spot in the sun will be facing the earth again in about 26 to 30 days.

There are other magnetic variations of lesser importance such as the lunar diurnal variation. The moon has a distinct effect on earth magnetism, smaller, but thought to be similar to that of the sun. The diurnal lunar variation seems to depend upon the declination, phase, and distance to the moon. At Batavia, Germany, it was found that the diurnal lunar variation was of the order of 0.62 minutes of arc for the declination, 3.1γ for horizontal intensity, and 3.5γ for the vertical intensity.

A second minor variation is that due to the eclipse of the sun. This is based upon the fact that if the sun is the cause of some of the variations of the earth's magnetic field, there must be a change when there is an eclipse of the sun. During the solar eclipse of May 29, 1919, a change of 3 minutes of arc was noted in the declination at Sobral, Brazil, and 2.5 minutes at Cape Palmas, Liberia. A marked variation was noted by the author during a partial eclipse in the spring of 1930, while making vertical intensity observations in the Ventura Basin, California. The variation was of the order of 8γ which was confirmed by Mr. Hugh Wallace, also making observations in the Ojai Valley, near the vicinity of the Ventura Basin. The variation was apparent in the background readings for the particular day.

A rather thorough investigation of sun spot influence seems to indicate that there is a relation between the number of sun spots and the number and amplitude of magnetic storms. The diurnal variation and the yearly periodic changes also show singularities during periods of large number of sun spot occurrences.

Magnetic Character of Day

Several methods have been developed for the purpose of assigning a numerical value to the magnetic character of a day, i.e., quiet, story, or intermediate. Chree, for example, worked out the expression

$$\frac{1}{100}\Sigma(R_D^2 + R_H^2 + R_Z^2)$$

where R represents the extreme amplitude of the magnetic element signified by the subscript; Schmidt of Germany used the expression

$$\Sigma(A_D + A_H + A_Z)$$

where A is the range of the mean hourly values during the day; and Bauer, an American, developed an expression of the type

$$EHR_H,$$

where E is a convenient factor, H the horizontal intensity, and R_H the absolute range.

In practical field work with magnetic methods it is preferable to express the magnetic character of the day in relation to the number of gammas of disturbance. This enables the observer to evaluate the merits of work done during magnetic disturbances.

PART II

MAGNETIC INSTRUMENTS AND THEORY

Character of Magnets

Most magnetic measurements are made by the deflection of a magnetic system, consisting of a needle or permanent magnets. The accuracy of such measurements depends upon the property of the magnets to retain magnetism and the method of supporting the magnetic system. Other features such as the method of observation and the effect of mechanical imperfections also influence the results, but the property of the magnets to retain magnetism is the principal factor influencing the accuracy.

The principal desirable qualities of magnets for the construction of magnetic measuring devices are: first, maximum retentivity, second, maximum coercivity so that a considerable reverse field is necessary to bring the magnetism to zero, third, high permanence with regard to time, temperature changes, and vibrations, fourth, low temperature coefficient so that there is not a large change of magnetic moment for minor changes of temperature, fifth, small time lag, that is to say the change of magnetic moment due to change of temperature follows right behind the temperature of the magnet, sixth, moderate hardness because of the general proportionality of the intensity of magnetization to the Brinnell hardness, and seventh, the magnets must have resistance to corrosion and oxidation.

Magnets can be designed to many specifications concerning their properties and in the construction of a magnetic instrument it is necessary to choose a composition for the permanent magnet, which will give the desired properties. A brief summary of the effects of composition on permanent magnets will be given to illustrate the variety of properties that can be obtained. Manganese up to 2.25%, has little effect on magnetic properties. Manganese above 2.25%, decreases the magnetic properties, for example steel with 12.36% manganese has practically no permeability, $\mu = 1.27$. Silicon in moderate amounts decreases the permeability but also increases the resistance to lose magnetism, for example steel with 2.5% silicon still has relatively high permeability, but low coercive force. Aluminum in steel increases the permeability; steel with 2.25% aluminum has a very high permeability, which is probably due to the forming of a coating of pure iorn. The addition of chromium decreases the permeability, but greatly increases the permanence (coercive force). Tungsten increases the permeability, coercive force and retentivity in amounts up to 3% and 4%. The coercive force for some tungsten steels go up to 74 gauss. Nickel up to 20% increases the coercive force and from 20% to 35% decreases the coercive force. Cobalt gives high coercive force, good retentivity, and good permanence. Molybdenum increases the coercive force. Steel of 3.5% to 4% molybdenum has coercive forces of 80 to 85 gauss which is the highest coercive force known.

The shape and metallurgical treatment of magnets is also very important. In most magnetometers the magnets are usually ellipsoidal, thus eliminating sharp edge effects as much as possible.

The magnetizing is usually accomplished by using an electromagnet; particular care is taken so that the axis of the magnet is parallel to the lines of force and that there is no tension in the magnet. The magnetizing field should be uniform as possible.

Artificial Ageing of Magnets

The ageing of magnets is very important in the construction of magnetic instruments. After a magnet has been recently magnetized its remanent magnetism will decrease until finally a point is reached where it will not lose any more magnetism. This process is hastened by artificial ageing. For example, the Sagamo Electric Steel Company uses the following: place magnet in oil and heat oil to 250° F. for half an hour, then put the magnet in a vibration hummer for two or three hours and then the ageing process is considered complete. Some other companies reverse the field until the magnet is about 10% less than the maximum.

The author has experienced difficulty in using the moments of magnets as certified by the Askania Werke Corporation after the magnets had been used for a short time, and this experience caused the following experiment to be performed with the auxiliary magnets accompanying a new magnetometer which had been received directly from Germany. The moments as determined in Germany were, for the large magnet 2529 c.g.s. units, for the medium 825 c.g.s. units, and for the small 205 c.g.s. units. The respective moments when received at Los Angeles were 2445, 760, and 206 c.g.s. units. These three magnets were remagnetized and the moments determined to be 2990, 1069, and 257 c.g.s. units. Then the three magnets were subjected to an ageing process, consisting of 6 cycles of continuous temperature treatment from 20° to 168° F. At this stage the moments were determined to be 2199, 801, and 154 c.g.s. units. Then the magnets were placed in a rotap machine for 20 minutes and the moments again determined as 2178, 791, and 154 c.g.s. units. After this the magnets were allowed to rest for six hours, the moments again being determined to be 2209, 812, and 164. Following this the magnets were put through the above described temperature treatment of six cycles each day for four days and then after a period of rest the moments were determined as 2140, 681, and 137 c.g.s. units. After six months use in the field the moments were again determined and the large magnet moment had changed from 2140 to 2123 c.g.s. units, the medium magnet moment changed from 681 to 679 c.g.s. units, and the small magnetic moment remained 137 c.g.s. units. The large change in the large magnet moment may be accounted for by the fact that the magnet was accidentally dropped about 3 feet on a concrete floor. A change of five units in the moment of the large magnets does not effect the determination of magnetic value very much when the magnet is being used the required distance from the magnetic system of the magnetometer as an auxiliary magnett. It should be pointed out that the above ageing process is much more severe than anything met in the field, but it shows the recovery in moment following severe treatment after the magnets have been allowed to rest for a time.

Classification of Magnetic Instruments

Magnetic instruments may be divided into two general classes, those which determine the direction of the earth's magnetic field or the magnetic components by means of the direction of the earth's magnetic field, and those which determine the intensity of the earth's magnetic field directly by comparison or by a measurable effect. Under the class depending upon the direction of the earth's magnetic field may be listed the following:

1. The position of rest of a magnet or coil free to turn about one or two axes. The compass, dip needle, coil, etc. are examples.
2. Position of a rotating coil when no current is generated, such as is the case with an earth inductor.
3. Computation made from the components of the total intensity.

Under the other class, measuring the intensity of the earth's magnetic components directly may be listed the following:

1. Period of oscillation of a suspended magnet.
2. Intensity of current generated by rotating a coil with axis of rotation in the direction of the perpendicular to the component.
3. Intensity of magnetization in nickel or soft iron bars.
4. Deflection of cathode rays or moving electrons in gases.
5. Comparison of magnetic moment of rotation with another moment of rotation such as that of:
    - (a) auxiliary magnet of known strength,
    - (b) soil carrying known electrical current,
    - (c) torsion or other elastic force,
    - (d) pull of gravity.

Fundamental Theory of the Magnetometer

The theory of the magnetometer can be derived by the investigation of the force that is produced by the earth's magnetic field upon a magnetic needle which is capable of free motion in space. Before going further into the theory of the magnetometer the author wishes to refer the reader to the works of A. Schmidt[5],

---

[5] A. Schmidt; Ein Lokalvariometer für die Vertikalintensität, Taet. Ber. des. Kgl. Pr. Meteor. Inst. f. d. J. (1914).

C. A. Heiland and P. Duckert[6], V. Spacek[7], and Heiland[8]. These works give collectively a detailed derivation of the theory of the vertical and horizontal intensity magnetometers and only a brief review of these works will be given in order to suggest the gist of the theory.

The set up for the mathematical analysis of the theory of the magnetometer consists of an imaginary needle, suspended at its center of gravity by an infinitely elastic fiber.

Since the earth's magnetic force is a vector, which is defined by magnitude and direction, this vector can be defined by the magnitude of three rectangular components: (X) the component in the astronomic north, (Y) the component in the astronomic east, and (Z) the component in the vertical direction. Since the force may not coincide with any of the above mentioned components we may assume a second set of coordinates such that the magnetic force lies along the x' axis and hence will lie along the magnetic axis of the imaginary needle. This system of coordinates, i.e. x', y', and z', of the magnetic needle are assumed to be at an angle to the astronomic directions. Consequently if we desire to determine the force we must first determine the values of the second set of components, and to facilitate this we may use Euler's geometric relations connecting two sets of coordinates.

[6] C. A. Heiland and P. Duckert: Beschreibung, Theorie und Anwendung einer Neukonstruktion von Ad. Schmidt's Feldwage, Ztsch. f. angew. Geophysik, (1924).

[7] V. Spacek: Mereni Schmidtovym variometrem pro vertikalni slozku zemskeho magnetismu v okoli Ripu. Rospravy II, Tridy Ceske Akademie Rocnik XXXVI, Cislo 10.

[8] C. A. Heiland: Theory of Adolf Schmidt's Horizontal Field Balance, Geophysical Prospecting, A. I. M. E., 1929.
Theory and Experiments Concerning a New Compensated Magnetometer System, Geophysical Prospecting, Technical Pub'n No. 483, A.I.M.E., 1932.

Let us call plane (CAB) of figure 2, Plate I, the plane of rotation of the hanging system. The trace of the plane of rotation with the horizontal plane makes an angle (a) with the north, counted from the north to the east. The angle which the plane of rotation makes with the horizontal plane is represented by (i). The angle which the needle or magnetic system makes with the intersection of the plane of rotation and the horizontal plane is represented by (n). It may also be pointed out that the plane of rotation is neither vertical nor horizontal and that x' is along the north end of the needle, y' is perpendicular to the magnetic axis of the needle, and the x' y' plane is the plane of rotation of the needle or system. The z' direction is perpendicular to the x' y' plane or the plane of rotation and thus z' is parallel to the axis of rotation. The intensities are then x', y', and z', and are given by the following equations of Euler:

$$x' = \begin{array}{l} X(\cos a \cos n + \sin a \sin n \cos i) \\ + Y(\sin a \cos n - \cos a \sin n \cos i) \\ + Z(\sin n \sin i) \end{array} \qquad (18)$$

$$y' = \begin{array}{l} X(\cos a \sin n - \sin a \cos n \cos i) \\ + Y(\sin a \sin n + \cos a \cos n \cos i) \\ + Z(\sin n \sin i) \end{array} \qquad (19)$$

$$z' = Y \cos a \sin i - X \sin a \sin i + z \cos i \qquad (20)$$

By inspection it may be seen that x' is ineffective because all magnetic material is polarized, as we assume that the north pole is equal to the south pole of the suspended needle, thus the north magnetism is equal to the south magnetism, hence the forces acting in the longitudinal direction of the needle are equal and opposite in sign and cannot exert a translatory force. Thus the resultant force

PLATE I.

Euler's Diagram Applied to a Magnet
Free to Swing in Space

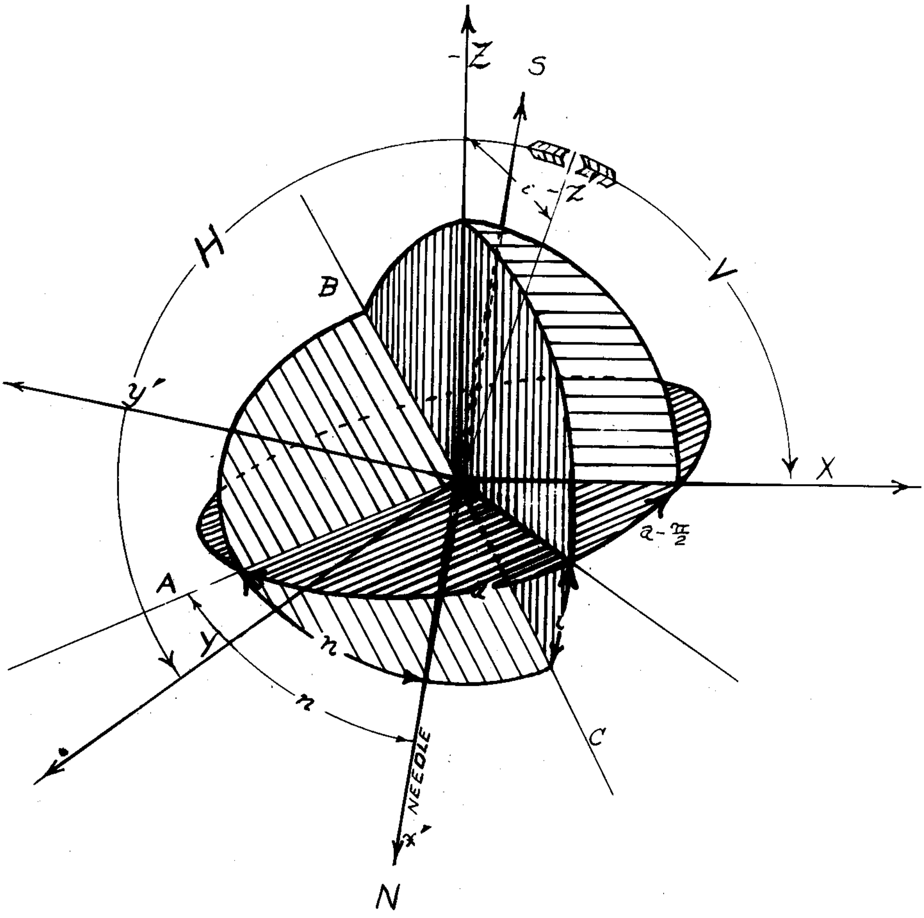

Fig. 2. Effect of Three Fixed Forces on Three Orthogonal Movable Components.

$\angle AOX' = a$ = azimuth of plane ABC in which the north pole of the system moves.

$\angle xOZ' = i$ = inclination of plane from the horizontal plane.

$\angle AOx = n$ = angle designating distance of north pole of needle upon plane ABC from horizontal plane acting upon the needle is $\sqrt{(y')^2 + (x')^2}$.

To further simplify, we may rotate the X Y Z system of coordinates about the Z axis by an angle equal to the declination so that X will lie in the magnetic meridian and Y in the magnetic east. This is done in practice because it is always easy to determine the direction of the horizontal projection (H) or the horizontal intensity with an ordinary compass. After this rotation about the Z axis the Y component vanishes, the X component is the horizontal intensity, and the Z component is the vertical intensity.

Since the axis of rotation is rigid in practice and not as described, the z' force which is parallel to this axis of rotation is ineffective and therefore may be neglected. It is to be noted at this time that the movement of the needle is confined to the plane ABC, and that the force y' is the only force which acts effectively upon the needle. If we denote the magnetic moment of the needle or the total moment of a pair of needles by the letter M, we may express the total moment acting on the system in the form $M_t = My'$ and substituting the value of y' as expressed in equation (19) and remembering that the X component equals the horizontal intensity, we have the following:

$$M_t = M[H(\cos a \sin n - \sin a \cos n \cos i) - Z \cos n \sin i] \quad (21)$$

In practice the needle does not rotate about an axis which passes through the center of gravity, and if this moment M_t is to apply to the practical instrument, a correction must be made for the moment due to gravity. The influence of gravity upon a magnetic system which is suspended in any direction in space may also be found by means of Euler's relations. If we assume that the direction of gravity is vertical and use a similar set of coordinates as were used to find the moment M_t, we may put $X_g = 0$, $Y_g = 0$, and $Z_g = g$. If we examine the forces x'_g and z'_g, we find that they can produce no lateral movement and can only cause different pressures on the bearing in these directions because the axis of rotation may be assumed to be rigid. Therefore we may write $M_g = mdy'_g$ as the moment due to gravity where m denotes the mass of the system, and d denotes the distance of the center of gravity of the magnetic system from the axis of rotation.

This formula holds only for the case that the center of gravity lies in the x'_g axis. Since this may not be the case, and in reality the center of gravity may have three coordinates in the system (x', y', z'), but by inspection we see the z' coordinate may be disregarded because the system rotates about an axis parallel to that direction and the axis in practice is rigid.

By replacing the y'_g by an expression corresponding to that given by equation (19), we may rewrite $M_g = mdy'_g$ in the form

$$M_g = - dmg \sin i \cos n \qquad (22)$$

This equation (22) gives the moment due to gravity if the center of gravity lies in the magnetic axis of the system. Now considering the other case, we denote by x'_d and y'_d the projections of d on the x' and y' axes, so that equation (22) may be written in the form

$$M_g = - mg \sin i \, (x'_d \cos n - y'_d \sin n) \qquad (23)$$

Now since the system is to be in equilibrium and this means the moment due to the magnetic forces must be equal to the moment due to gravity, we may write

$$M_t = M_g$$

or in better form $$M_t - M_g = 0.$$

Thus

$$M\left[H(\cos a \sin n - \sin a \cos n \cos i) - Z \cos n \sin i\right] + \left[- mg \sin i \,(x'_d \cos n - y'_d \sin n)\right] = 0 \qquad (24)$$

and by rearranging

$$\frac{\sin n}{\cos n} = \tan n = \frac{MH \sin a \cos i + \sin i\,(MZ + mgx'_d)}{MH \cos a - mg\, y'_d \sin i} \qquad (25)$$

This formula (25) has been called the principal formula for both the vertical and horizontal magnetometer for any azimuth and inclination. It also may be added that this formula is by no means confined to these two instruments. The equation holds for all magnetic systems capable of free movement in any direction in space as described. The formula is so fundamental that not only the theory of the compass, the inclinator, and the dip needle may be based upon it, but also that of all deflection magnetometers.

This equation gives the value of the tangent of the deflection when the proper values are substituted and the most important use of this equation is that it can be used to test out the possible errors for say, a deviation from true orientation by a small angle, a small angle of tilt in leveling, lateral migration of the center of gravity by an increment of x' or y' due to changes in temperature, changes of gravity, or due to shock, influence of change of vertical intensity, and the influence of the change of moment of the system.

For both the vertical and the horizontal intensity magnetometers of the Schmidt types, this formula is considerably simplified because of the positions of the magnetic system in making magnetic observations. For instance in using the vertical balance $a = \frac{\pi}{2}$ or $\frac{3\pi}{2}$ and $i = \frac{\pi}{2}$. Thus the fundamental formula reduces to

$$\tan n = \frac{MZ + mgx'_d}{-mgy'_d}$$

but since the center of gravity must be on the south side and below the axis of rotation the formula is better written in the form

$$\tan n = \frac{MZ - mgx'_d}{mgy'_d} \qquad (26)$$

A few substitutions are necessary in applying the formula to the horizontal balance because the zero position of the magnetic system is vertical instead of being horizontal as is the case with the vertical intensity balance. Furthermore it is obvious that the components x' and y' must be interchanged, because y' is parallel to the magnetic axis. It also should be noted that n must be denoted by $\frac{\pi}{2} - \phi$ and that the positions for use require that the angle $a = 0$ and $i = \frac{\pi}{2}$. Thus the principal formula for the horizontal intensity balance becomes

$$\tan \phi = \frac{MH - mgx'}{MZ + mgy'} \qquad (27)$$

The reading made in magnetic observations with the Schmidt type of magnetometer are not obtained in angles but in scale divisions of a graduated scale, which is placed in the focal length (f) of a lens in an "autocollimational" optical system with a Gauss eye-piece. By inspection of figure 3, Plate II, equation

$$2n = \frac{S - S_o}{f}$$

is obtained, which gives an expression for the deflection in terms of angle because arc divided by radius equals angle. And since (n) is a very small angle, tan n = $\frac{S - S_o}{2f}$ where 2f = 1333 scale divisions or 13.33 centimeters, S denotes the reading when the system is deflected and S_o corresponds to n = 0. It then follows that

$$S - S_o = 2f \frac{MZ - mgx'_d}{mgy'_d} \qquad (28)$$

Let $S' = S - S_o$. If S'_1 is read at a station corresponding to a vertical intensity Z_1 and at a second station S'_2 is read corresponding to Z_2, then from formula (28) it follows that

$$\Delta S = S'_1 - S'_2 = \frac{2fM(Z_1 - Z_2)}{mgy'_d} \qquad (29)$$

To further simplify we may place $\Delta Z = Z_1 - Z_2$ and hence

$$\Delta Z = \frac{mgy'_d}{2fM} \Delta S \qquad (30)$$

It is also known that $\Delta Z = e \, \Delta S$, where (e) represents the scale value of the instrument. And therefore

$$e = \frac{mgy'_d}{2fM} \qquad (31)$$

This last formula gives the factors which affect the scale value (e) and it is of particular interest to note that the scale value is

PLATE II.

Magnetometer Optical System

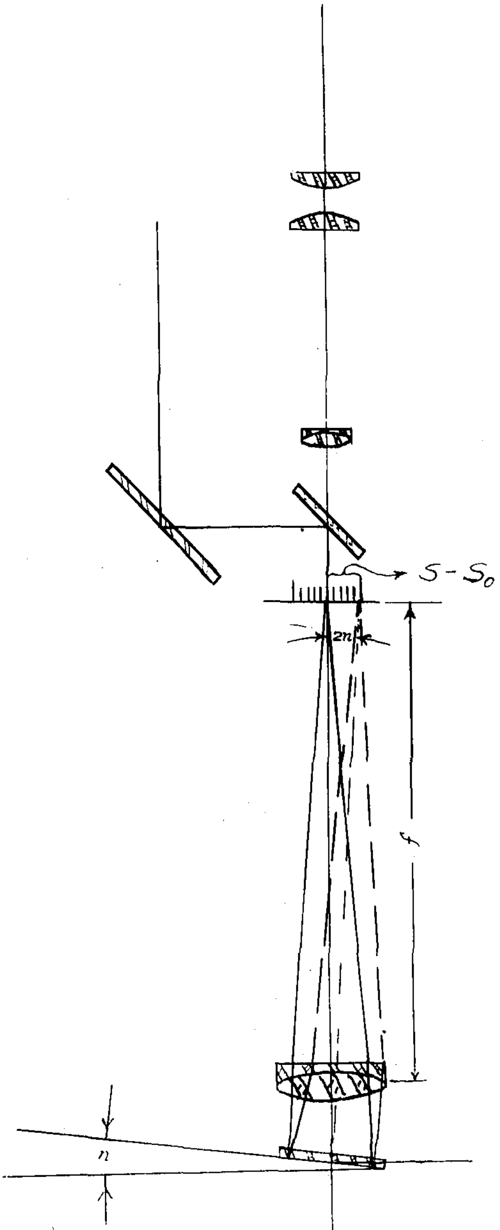

Fig. 3 - Sketch of Optical System
$S - S_0$ = Reading
f = Focal length
n = Angle of deflection
$2n = \frac{S - S_0}{f}$

directly proportional to the distance of the center of gravity below the x' axis of the system. This furnishes a means of varying the scale value by merely raising to decrease and lowering the center of gravity to increase the scale value.

A very similar process of reasoning gives the scale value for the horizontal intensity magnetometer as

$$e = \frac{MZ - mgy_d}{2fM} \qquad (32)$$

It is of interest to note that among the factors which affect the scale value of the horizontal intensity variometer is the vertical intensity. This makes it necessary to correct the horizontal intensity reading where there is a large change in the vertical intensity.

Description of Vertical Intensity Magnetometer of the Schmidt Type

The Adolf Schmidt vertical intensity field balance is simply an improved type of dip needle, with a somewhat differently constructed magnetic system. The system consists of two thin magnetic steel bars, elliptical in shape, which are fastened to a cube of aluminum. This aluminum cube and pair of magnets are supported by a quarts knife edge which rests on cylindrical quartz bearings. A plane mirror is attached to the top of the aluminum cube so that very minute tilts of the system can be read by means of a telescope. This central cube is also provided with three blunt-nosed projections, one on each end and one on the under side. Into these projections are screwed adjustable bronze weights which are secured in position by

PLATE III.

Types of Magnetic Instruments

Fig. 4 Horizontal Field Balance

Fig. 5 New Magnetometer
Designed to accommodate
either a vertical or a
horizontal magnetic
system

Fig. 6 Small Earth Inductor
Rotating the coil in the
earth's field induces
current which is measured
with a galvanometer having
a sensitivity of 1 x 10^{-9}
amperes.

Fig. 7 Vertical Field Balance

centrally placed screws. The latest types of magnetic systems have the two blunt-nosed projections on the ends of the aluminum cube replaced by two spindles upon which are adjustable weights. This new magnetometer system is particularly well described in Technical Publication No. 283, A.I.M.E. by C. A. Heiland and W. E. Pugh. The purpose of the two weights on the ends of the cube correspond exactly to that of the small weight found on the south end of an ordinary compass needle; that is to adjust the center of gravity of the system parallel to the horizontal axis of the system. The purpose of the third adjusting weight on the underside of the cube is to make possible, within certain limits, the varying of the sensitivity of the system. By raising the weight the system is made less stable, consequently increasing sensitivity at the expense of stability, and by lowering the weight the system is made more stable thereby decreasing the sensitivity. The magnetic measurements are made with the system swinging perpendicular to the magnetic meridian to eliminate any influence of the horizontal intensity. As a protection against rapid fluctuations of temperature the instrument is provided with a two fold casing, the other one lined with cork slabs. The instrument is fitted with Centigrade thermometers and an arresting device for releasing and arresting the magnetic system.

When the vertical intensity variometer is being used with photographic recording apparatus, the telescope is replaced by a mirror attachment which contains one large mirror inclined at 45°, one small mirror which is connected to the case for the purpose of making a straight line on the drum for a reference base on the magnetograms, and a small mirror which is controlled by a Bourdon-tube thermometer.

The inclination of the large mirror can be changed by an adjusting screw at the rear side of the casing. Screws are also provided for the adjusting of both the horizontal and vertical positions of the two other small mirrors. Before the mirrors, on the front of the attachment is a lens, in the focus of which the source of light must be placed.

The oil lamp which is attached to the side of the recording piece of apparatus furnishes the light which first passes through a lens and then through a slit which is placed in the focus of the lens of the mirror attachment. The light that falls on the large mirror inclined at 45° is reflected so that it falls on the plane mirror secured to the magnetic system where it is reflected back on the inclined mirror and then reflected to the drum or cylinder wrapped with a sheet of sensitized paper inside the recording apparatus. The slit images which fall upon the other two small mirrors are reflected directly upon the drum. The small mirror attached to the case provides a base line from which to count the changes, and the other small mirror attached to the Bourdon-tube thermometer provides a record of the temperature variation.

When the lamp is lighted and everything is properly adjusted, three images of the slit appear at the same height on the German silver graduated scale in front on the case, but if the little door to which the scale is attached is open the light of the three slit images is focused by a cylindrical lens, so that on the photographic paper three sharp points of light appear making continuous curves when the drum is revolved. As the magnet system swings back and forth, the point of light passes to and fro on the sensitized sheet, producing a curve showing the magnetic variations on the chart as accurately as visual readings taken with the field variometer.

The drum is driven by a precision lever clock which revolves the drum once in two or once in twenty-four hours, depending upon how the mechanism is set. The clock also operates a shutter which cuts off the light from the mirrors at intervals of one hour when the drum is set to revolve once in twenty-four hours and at intervals of five minutes when the drum is set to revolve once in two hours. The distance between the hourly breaks is about two centimeters and so one millimeter of the line represents three minutes of time. A deviation of one millimeter of the chart line represents a variation of vertical intensity of about 8.5 gammas. The charts can be easily estimated to one quarter of a millimeter which represents approximately one tenth of a scale division as usually read on the visual field balance. The Bourdon-tube causes a deviation of about 7 millimeters for every degree Centigrade change in temperature, so that it is easy to extimate the temperature changes of the tube to one tenth of a degree Centigrade.

Very recently the Askania Werke Corporation has developed a new type of variometer which has a case designed so that either a vertical or a horizontal magnetic system may be placed in it. Thus the instrument can be changed from a horizontal intensity magnetometer to a vertical intensity one bymerely exchanging the magnetic systems. This same corporation has also developed a new set of recording apparatus which is capable of recording both the horizontal and vertical components of the earth's magnetic field simultaneously. In general this apparatus consists of two magnetometers arranged on opposite

PLATE V.

Vertical Intensity Magnetometer

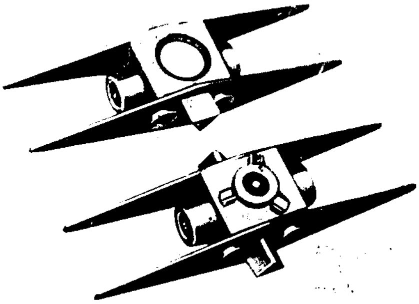

Fig. 8 Magnetic system from a vertical intensity magnetometer

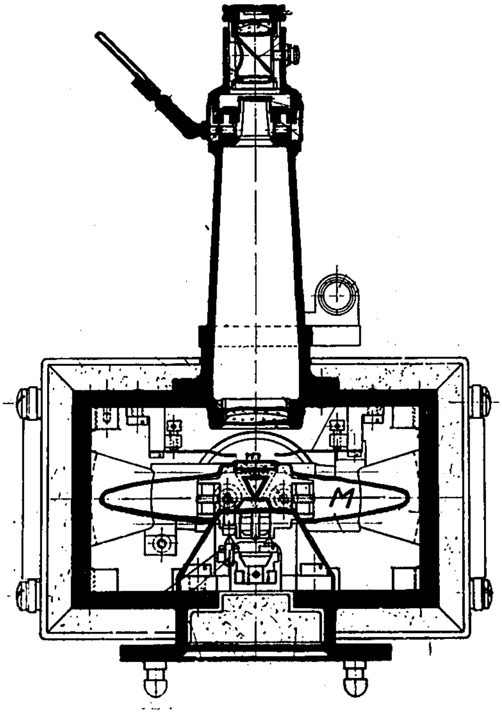

Fig. 9 Section of vertical intensity Magnetometer (Askania Model)

Fig. 10 Temperature compensating magnetic system. The compensation is obtained by an arrangement of temperature and latitude spindles, which cause the magnetic and metal expansion effects to be partly neutralized by a mechanical effect caused by expansion or contraction of the temperature spindle.

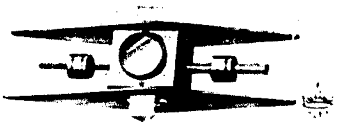

sides of a recording drum and both instruments inclosed in the outside case of the apparatus making it unnecessary to have the equipment set up in a dark room while recording.

Description of the Horizontal Intensity Magnetometer of the Schmidt Type

The horizontal intensity magnetometer differs from the vertical intensity magnetometer by the fact that the magnetic system is arranged so that the magnetic axis of the system is nearly vertical, whereas in the vertical intensity instrument the magnetic axis is horizontal. The other parts of the two instruments are essentially the same except for the shape of the casing which accommodates the different arrangements of the magnetic systems. The optical systems are identical and the essential difference in the operation is that the system of the horizontal intensity instrument oscillates in the magnetic meridian while the vertical intensity instrument oscillates at right angles to the magnetic meridian.

Summary of other Magnetic Instruments

Unifilar magnetometer.

The unifilar magnetometer consists of a magnetic needle suspended by a fiber in a suitable case. The instrument is also fitted with an arm which is graduated and carries a small magnet of known moment. The horizontal intensity is determined by a deflection method. This is accomplished in the first position of

Gauss or in the modified first position called the first position of Lamont.

Tangent method of using Kew type of magnetometer.

The kew type of magnetometer is essentially a very delicate compass with a deflection arm attached to the case. The instrument is first leveled and turned about a vertical axis until the needle reads zero on the graduated scale in measuring the horizontal magnetic intensity. In this position the needle is perpendicular to the axis of the deflection arm. A deflecting magnet is then placed on the deflecting arm at some convenient distance from the needle and the deflection of the needle noted. In field practice the north pole of the deflecting magnet is placed toward the needle and a deflection noted. Then the south pole of the magnet is placed toward the needle keeping the same distance from the needle and a corresponding deflection noted. Then by taking the mean of four observations the errors due to unsymmetrical magnetization and eccentric suspension are eliminated. The value of the horizontal intensity is computed by an equation of the type

$$H = \frac{2M}{r^3 \tan a} \left(1 + \frac{P}{r^2} + \frac{Q}{r^3} + \ldots\right) \qquad (33)$$

Where M is the moment of the deflection magnet, r the distance of the center of the magnet from the axis of rotation of the needle, (a) the deflection of the needle, and P and Q are called distribution coefficients and are functions of the dimensions of the magnets and are given by the following

$$P = 2L^2 - 3L_1^2 \tag{34}$$

$$Q = 3L^4 - 15\,L^2L_1^2 + \frac{45}{8}\,L_1^4 \tag{35}$$

when L is the distance between the poles of the deflecting magnet (usually 8/10 of total length) and L_1 is the distance between the poles of the needle.

The Smith magnetometer

The Smith magnetometer is manufactured by the Cambridge Instrument Company. It consists of a magnetic system free to turn on a vertical axis mounted between a pair of coils through which a known electric current is passed. The diameter of the coils is large compared with the length of the magnetic system. The magnetic system is made up of two small cobalt magnets (1.5 x 1.5 x 12 mm.) mounted on a float on an oil surface, the system being centered on a sapphire bearing. There is a mirror on the system which allows 10 seconds of arc readings. The current used is about 1/10 of an ampere, measured to an accuracy of 5 micro-amperes. In observing the horizontal intensity with this instrument the coils are turned at a small angle (a) with the magnetic meridian, the current is then applied so as to create a field opposite to that of the earth. The amount of current is varied until the system turns to a position perpendicular to the magnetic meridian. The horizontal intensity is given by

$$H = k\,i\cos a$$

where k is the constant of the coil and (i) is the current in amperes. The current can also be adjusted so that the system is perpendicular to the axis of the coils and then $H = ki/\cos a$. This instrument is much better than many of the earlier types and it is easy to operate. It takes less time to make an observation with the Smith magnetometer than with a Kew type of instrument, but the cost of the Smith magnetometer makes its use prohibitory when much better instruments are available as for example the Schmidt types.

Compass and deflecting-rod magnetometers

Any compass equipped with a graduated deflecting arm can be used as a horizontal intensity magnetometer. Examples are the Thalen-Tiberg magnetometer manufactured in Sweden specially designed for the investigation of magnetic iron ores, and the Wilson magnetometer attachment for use with the Brunton Pocket Transit. These instruments measure the absolute horizontal intensity and give satisfactory results in detecting anomalies of over 200 gammas.

The Dahlblom magnetometers are of both the horizontal and vertical types. The vertical intensity instrument is very similar to a dip needle and the same analysis applies to it as does for the horizontal intensity instrument. The Dahlblom magnetometers are sometimes called the sine-arm magnetometers because the effective length of the deflection arms are varied and a constant deflection maintained which is usually 30°. In this case the couple tending to rotate the needle back into the magnetic meridian is equal to ($HM' \sin 30°$), and since the arm is perpendicular to the needle in its deflected position we may write

$$HM' \sin 30^\circ = \frac{2MM'}{r^3}$$

or that $$H = \frac{4M}{r^3} \qquad (36)$$

Often the deflection arm is graduated so that the total intensity can be read off at a glance after the needle has been properly deflected. This instrument may be placed on its side and the vertical component measured and thus the Dahlblóm instrument would be a universal instrument if it was capable of determining magnetic anomalies of the order of 20 gammas, but its accuracy is about ± 70 gammas.

Haalck universal magnetometer

The Haalck Magnetometer consists of two magnetic systems, each similar to the system of the Schmidt magnetometer. The two systems are arranged at right angles to each other and by this means it is possible to measure both the vertical and horizontal component of the earth's magnetic field with the same instrument. This instrument also has a deflection arm.

The Haalck magnetometer is a ~~hard~~ instrument difficult to handle, and consequently it has been withdrawn from the market. In general the instrument gave good results, and may even approach the sensitivity of the Schmidt instruments, but it was much more difficult to use as a practical field instrument.

Hotchkiss dip needle

The Hotchkiss dip needle differs from an ordinary dip needle in that the needle system is adjusted so that when it is placed in the magnetic meridian and brought to rest in a position at right angles to the inclination of the earth's magnetic field, and then released the extreme reading of the first swing of the needle is a function of the total intensity. The extreme readings are corrected for temperature and when plotted give a curve which is surprisingly similar to those obtained by the use of a good magnetometer

The conclusions are that the Hotchkiss dip needle give a rough idea of the values of the total intensity and the instrument should give good results for reconnaissance work, but where detail of the magnetic expression is desired a better magnetometer is needed. It should also be mentioned that the Hotchkiss instrument is only suitable for work over sedimentary areas because it is there that the inclination remains most nearly constant. Over magnetic bodies the dip will change greatly and consequently the results obtained by the use of the Hotchkiss dip needle might be susceptible to considerable error.

Earth inductor or rotary inclinator.

A rotary inclinator consists of a coil mounted in such a manner that its axis of rotation may be oriented in any direction in space. The vertical and horizontal angles of the axis of rotation can be measured. The coil is usually rotated by a flexible cable arrangement.

When the axis of rotation coincides with the direction of the earth's magnetic field the current generated upon rotating the coil will be zero. When the axis coincides with the horizontal component its position will give the declination and the current will give the vertical intensity. When the axis of rotation is vertical the current produced will be a measure of the horizontal component.

The difficulty of operating earth inductors as a means of measuring the magnetic components lies in the fact that considerable difficulty is experienced in rotating the coil at a constant known speed. This problem may have a solution in using a synchronous motor and reed device similar to the apparatus used for timing reflection seismic records.

There are other magnetometers such as the bifilar type, the Wehnelt Cathode Ray tube magnetometer, ferromagnetic compasses, and a device for measuring the magnetic component by the induction in metallic bars of low coercive force, but these instruments are not very important as field instruments and consequently will not be described in this paper.

PART III.

INTERPRETATION OF MAGNETIC ANOMALIES

General Considerations

Magnetic anomalies may be classified as to cause and can be divided into two main classes. Under the first class are grouped those anomalies which are due primarily to conditions very similar to those in the vicinity of a bar magnet. This bar magnet conditions is often experienced while investigating magnetite deposits and also frequently in the case of very magnetic rocks. In general it can be said that the more basic a rock, the more likely the existence of the condition of a bar magnet distribution. In making surveys over basaltic rocks, a typical magnetic anomaly is usually found which illustrates very conclusively the bar magnetic type of distribution of magnetism. In general the magnetic topography of an area which is underlain by bar magnet conditions is somewhat regular and usually characterized by many relatively large positive and negative, elliptical shaped anomalies rather closely spaced. An average example of this type of magnetic expression is shown by Plate VI. This is especially true if the magnetic rocks occur in a more or less horizontal layer. If the deposits are vertical or very nearly so the bar magnet may be considered as infinite in extent downward and only one pole need be considered.

The second class of magnetic anomalies consists of effects from rocks which may be considered as made up of matter containing a magnetic mineral more or less uniformly distributed throughout the rock. In other words we may consider each grain or particle of the of the magnetic mineral as an individual magnet. This condition is often experienced in working over areas of sedimentary rocks underlain by granites. Usually we think of the magnetic mineral as being magnetite. The magnetic anomalies over such conditions are usually characterized by small changes in intensities from place to place and the positive and negative anomalies cover much larger areas than is the case above, bar magnet conditions. The magnetic relief is often characterized by very irregular outlines of the positive and negative areas as compared with the more or less smooth outlines of these areas in the case of bar magnet conditions. The isonomalic lines also have very irregular trends and are very rarely parallel if the sources of the anomalies lie very close to the surface. On the other hand, if the source of the magnetic anomaly is very deep, as for example basement rocks covered by a very thick mantle of sedimentary beds, the isonomalic lines are more regular and often roughly parallel to each other.

In this class of uniformly distributed magnetic elements are found two magnetic conditions. First, there are those deposits consisting of grains magnetized simply by the induction of the earth's magnetic field. This seems to be the case in which the magnetite grains have been transported from the original position in igneous rock to a secondary location, as for example, sediments. A similar case is often found when magnetite grains have been formed by chemical action. Examples of this condition are found in sedimentary deposits, placer deposits, and especially the iron ranges of Michigan. In this case the axis of magnetization coincides with the direction of the earth's field. Second, there are the conditions where the magnetite grains are formed within a cooling igneous rock and at some point in the cooling the grains become magnetic and assume magnetic axes which are retained with little change during geologic time in spite of the influence of the earth's magnetic field. In such cases the direction of the magnetization is often at some angle to the direction of the earth magnetic field. In fact, this permanent magnetization condition may be inferred when conditions as described above are encountered in field work, and especially if the geologic conditions warrant the presence of a granite, schist, or gneiss in the vicinity. As an explanation writers often offer the hypothesis of the earth's field having changed in both intensity and direction during past geologic time, or that the particular abnormal magnetic anomaly has been caused by lightning striking the area under investigation. Such explanations do not seem adequate in the light of information gained by extensive magnetic investigations in recent years.

If we consider the induction of the earth magnetic field as responsible for all the anomalies in the north magnetic hemisphere, we note that the induced magnets will always have the south poles up and consequently all the vertical intensity anomalies should be positive as compared to the normal vertical intensity of the earth magnetic field. Negative anomalies could only exist over diamagnetic bodies and since the earth's crust in general is not made up of matter possessing such magnetic properties, we must resort to another explanation for such anomalies in the north magnetic hemisphere. It is also important to remember that if we have a heavy concentration of magnetic materials such as magnetite and thus a rather strong magnetic effect induced by the earth's magnetic field, we will also have induced opposite polarity in the less magnetic deposits around the main one. This will have a tendency to make the positive vertical intensity anomalies stand out more in relief.

Methods of Interpretation

There are two general methods of interpreting magnetic results. These methods are called the direct and indirect methods. The direct method is purely qualitative in nature, and the conclusions are derived directly from the shape of the profile curves and the configuration of the isonomalic lines. Briefly the method consists of comparing new results with results which seem to be similar from both the physical and geological points of view. Usually the interpretation by this method is obtained by a direct comparison of the results obtained over unknown geologic conditions, with results obtained over more or less known geologic conditions. Such a method obviously makes the interpretation very difficult if new results are obtained which seem to have no general similarity with any known results. In other words, if the investigator using the direct method should encounter results obtained over a geologic feature of a type with which he had never had any experience his solution of the problem may be susceptible to errors.

The indirect method of interpretation is most often used when quantitative data free from complicated magnetic effects are available. The principle of this method is to assume a certain configuration of the disturbing masses in the subsurface, which is in agreement with the geological knowledge of the area, as a basis to compute the sum of the effects at the surface. Then these theoretical results are compared with the field results and in case the results differ, the geological assumptions are modified and the theoretical results again computed. This process is continued until a satisfactory agreement between the field observations and the theoretical results is obtained. In other words, the indirect method is a cut and try process until a suitable solution is secured which satisfies all of the required conditions. By this method it is possible to arrive at several different interpretations for the same field observations and in such a case it is indispensable to be familiar with the geology so that the impossible solutions of the problem may be eliminated.

Since this method does not give a unique solution to the problem it is often advisable to check the results by another geophysical method in the case that very contradictory solutions are obtained. However, the geological information combined with experience in interpretating magnetic anomalies is sufficient to eliminate the superfluous solutions in most cases. Very often the final conclusions are secured by using both the direct and indirect method.

In general the indirect method is superior to the direct method because of the more quantitative nature of the results.

Only when we have one disturbing body or formation of rather simple geometrical dimensions is it possible to compute the depth directly from the observations. Such examples as vertical or inclined igneous dikes, basalt flows, and magnetite concentrations may give sufficiently simple relations to be handled in this way, but in the case of complex dimensions together with irregular magnetization the problem becomes too complicated to yield a solution.

A factor which is very helpful in determining the depth of simple bodies is that the interpretation may be treated according to the theory of simple bar magnets. This is especially true in dealing with vertical or inclined magnetic sheets because such bodies usually have considerable extent in depth which is large compared with the depth from the surface where the observations are made, and thus it is sufficient to consider only one pole.

Only some of the special types of bodies will be treated in the following consideration because the more complicated shapes and attitudes may be expressed as a combination of special geometrical forms and positions.

Case of Infinite Vertical Body

As a special case we may assume a vertical body infinite in extent downward and with the south pole up as would be the case in the Northern Hemisphere if the magnetization is induced by the earth's field. Since the north pole is assumed to be at an infinite distance away there will be no effect of the presence of the north pole. Therefore we may write the expression for the potential due to a single pole

$$U = \frac{M}{r} \qquad (37)$$

The first derivative of the potential with respect to any direction is the force component in that direction, and hence for a point whose distance from the pole is (r) we may write

$$\Delta X = -U_x = -U_r \frac{dr}{dx} \quad (U_x = \text{the partial}) \qquad (38)$$

$$r^2 = x^2 + y^2 + z^2$$

and holding y and z constant

$$2r\,dr = 2x\,dx$$

therefore

$$\Delta X = xM/r^3 \qquad (39a)$$

and similarly

$$\Delta Y = yM/r^3 \tag{39b}$$

$$\Delta Z = zM/r^3 \tag{39c}$$

and

$$\Delta T = \sqrt{\Delta X^2 + \Delta Y^2 + \Delta Z^2} = M/r^2 \tag{40}$$

From these equations expressions for the depth (r) may be secured and assuming that one knows the pole strength (M) quantitative depths may be computed.

Case of Vertical Body of Finite Length

In considering a body which is finite in length we must also take into account the effect of the more distant magnetic pole. The terms finite and infinite are used in this connection to mean relative magnitudes only. Finite length represents a distance between the poles of a body such that the more distant pole from the point of observation has an effect at the point which can not be neglected. Infinite length represents a pole separation distance sufficient to make the effect of the more distant pole negligible.

From the above considerations we may immediately write the following expressions for the disturbing components in the case that the distance between poles is considered finite.

$$\Delta X = \frac{xm}{2L}\left(1/r_a^3 - 1/r_b^3\right) \tag{41a}$$

$$\Delta Y = \frac{ym}{2L}\left(1/r_a^3 - 1/r_b^3\right) \tag{41b}$$

$$\Delta Z = \frac{m}{2L}\left\{\frac{z - L}{r_a^3} - \frac{z + L}{r_b^3}\right\} \tag{41c}$$

Where (L) is the distance between the poles of the magnet and experience in dealing with such bodies occurring in nature has found that the distance between the poles is usually nine tenths of the total length of the magnetic body.

In practice only the equation for Z is used, because the values of ΔX and ΔY are normally not measured and if used to check values obtained by the expression for Z we usually calculate values for these horizontal components from equations (2) and (3). In any event such a check is only one in arithmetic and not one for the determination of the actual depth.

Case of an Inclined Body Finite in Extent

$$\Delta H = xm\left\{\frac{1}{r_a^3} - \frac{1 - \dfrac{2L}{x\cos i}}{r_b^3}\right\} \tag{42a}$$

$$\Delta Z = zm\left\{\frac{1}{r_a^3} - \frac{1 - \dfrac{2L}{z}\sin i}{r_b^3}\right\} \tag{42b}$$

In case it is desirable to consider the inclined body infinite in extent it is only necessary to place (r_b) equal to infinity in the above expression for ΔZ and the result will become equivalent to the expression derived for the case of the infinite vertical body.

Case of Disseminated Magnetic Deposits

If we assume that a rock has some mineral like magnetite more or less uniformly distributed throughout its mass and that each grain of magnetite acts as an individual magnet, we may then assume that the intensity of magnetization is expressed by the relation

$$J = \frac{M}{V}$$

where (J) is the intensity of magnetization and $\frac{M}{V}$ is the total magnetic moment divided by the total volume.

And if the axis of magnetization coincides with the direction of the earth's field, we may assume that the grains throughout the formation owe their magnetism to induction by the earth's field. This assumption requires that the south pole of the magnet is up in regions of the north magnetic hemisphere.

Under these conditions we may consider two possibilities. First, we may assume that the magnetic rock has a uniform strike in any direction, a vertical dip, and a surface thickness equal to 2a. In this case it is quite easy to show that the horizontal and vertical components of the magnetic disturbance due to the presence of the magnetic rock are given by the following equations, where (x) is the horizontal distance of the station of observation from the middle plane of the formation, (h) is the depth of the surface covering, assumed to be uniform, and (C) is a constant.

$$\Delta H = C \log \frac{h^2 + (x+a)^2}{h^2 + (x-a)^2} \qquad (43)$$

$$\Delta Z = 2C \left(\arctan \frac{x+a}{h} - \arctan \frac{x-a}{h}\right) \qquad (44)$$

It is to be noted that in case $x = 0$ equation (43) gives $\Delta H = 0$; therefore at a point over the middle point of the magnetic formation the disturbance of H is zero. It is also evident that at corresponding stations on opposite sides of the middle point the horizontal components are equal in absolute value.

The maximum or minimum values of the horizontal disturbance component are obtained by differentiating the right-hand side of equation (43) with respect to (x) and placing the result equal to zero, which gives

$$x = \pm\sqrt{h^2 + a^2} \qquad (45)$$

This determines two points at equal distances from the center of the magnetic formation at which the horizontal component has maximum absolute values. Since (x) is a measurable distance after the profile has been completed we may write

$$x^2 = h^2 + a^2 \qquad (45a)$$

This equation expresses that the thickness of the formation is always less than the distance between the points of maximum absolute values of the horizontal intensity disturbance, except when $h = 0$, or the rock is uncovered, in which case the thickness is equal to the separation of the maxima.

By solving the right hand side of equation (44) for maximum and minimum values of ΔZ we can show that the maximum value of ΔZ occurs when $x = 0$. Consequently if the rock strikes north and south the maximum value of the Z-disturbance corresponds to a zero value of the H-disturbance. When the strike of the formation is not north and south these values do not occur at the same station, thus some idea of the attitude of the formation may be obtained by observing the displacement of these values. In other words if these values coincide the formation is vertical and if there is considerable horizontal distance between these values, the formation dips in some direction.

The second possibility to be considered is the case where the magnetic rock is not vertical and continues indefinitely downward at some particular angle. Here again we may neglect the effect of the north magnetic pole because of its great distance from the area of observation. Therefore we need only consider the south poles which are very near the upper surface of the magnetic material. However, in case the rock does not dip at high angles the above assumption can not be safely made and the influence of the bottom poles must be taken into account.

If we assume that the magnetic formation has a section thickness equal to (a) taken parallel to the surface, is buried uniformly to a depth (h), and dips at an angle equal to θ, we may show the horizontal and vertical intensity disturbances by the following equations. In these equations (x) is the distance of the point of observation from the lower edge of the formation, and C is again a constant envolving the permeability of the magnetic formation and permeability of the surrounding materials.

$$\Delta H = C\left[\frac{q^2}{1+q^2}\log\frac{h^2+x^2}{h^2+(x-a)^2}+\frac{2q}{1+q^2}\left\{\arctan\frac{x-a-qh}{qx-qa+h}-\arctan\frac{x-qh}{qx+h}\right\}\right] \qquad (46)$$

$$\begin{aligned}\Delta Z = C\Big[& 2\Big\{\arctan\frac{x}{h} - \arctan\frac{x-a}{h}\Big\} \\ & + \frac{q}{1+q^2}\log\frac{h^2+x^2}{h^2+(x-a)^2} + \frac{2}{1+q^2} \\ & \Big\{\arctan\frac{h(1+q^2)-q(1+x)}{q^2(1+x)} \\ & - \arctan\frac{a+qh-x}{h-qa+qx}\Big\}\Big] \qquad (47)\end{aligned}$$

In the above equations $q = \tan\theta$.

If we transpose the constant C to the left side of the equation (46), differentiate the right side, and placing the result equal to zero, we may solve for (x) which will give the positions of stations at which H is a maximum in absolute value. This gives

$$x = \frac{qa + 2h}{2q} \pm \frac{\sqrt{q^2a^2 + 4q^2h^2 + 4h^2}}{2q}$$

If we place the difference of the two roots equal to 2d which is the measurable distance on the ground between maxima of the absolute values and substituting for (a) its value $2w/\sin^2\theta$, where 2w is the true thickness of the magnetic formation, we have

$$d^2 = \frac{h^2 + w^2}{\sin^2\theta}.$$

Therefore it is evident that the distance between the maximum and the minimum varies inversely as the dip of the magnetic formation.

The relations given by the above equations are illustrated by Plate IV, Relation of Dipping Magnetic Beds to Magnetic Profiles of Intensity.

PLATE IV.

Relation of Dipping Magnetic Beds to

Magnetic Profiles of Intensity

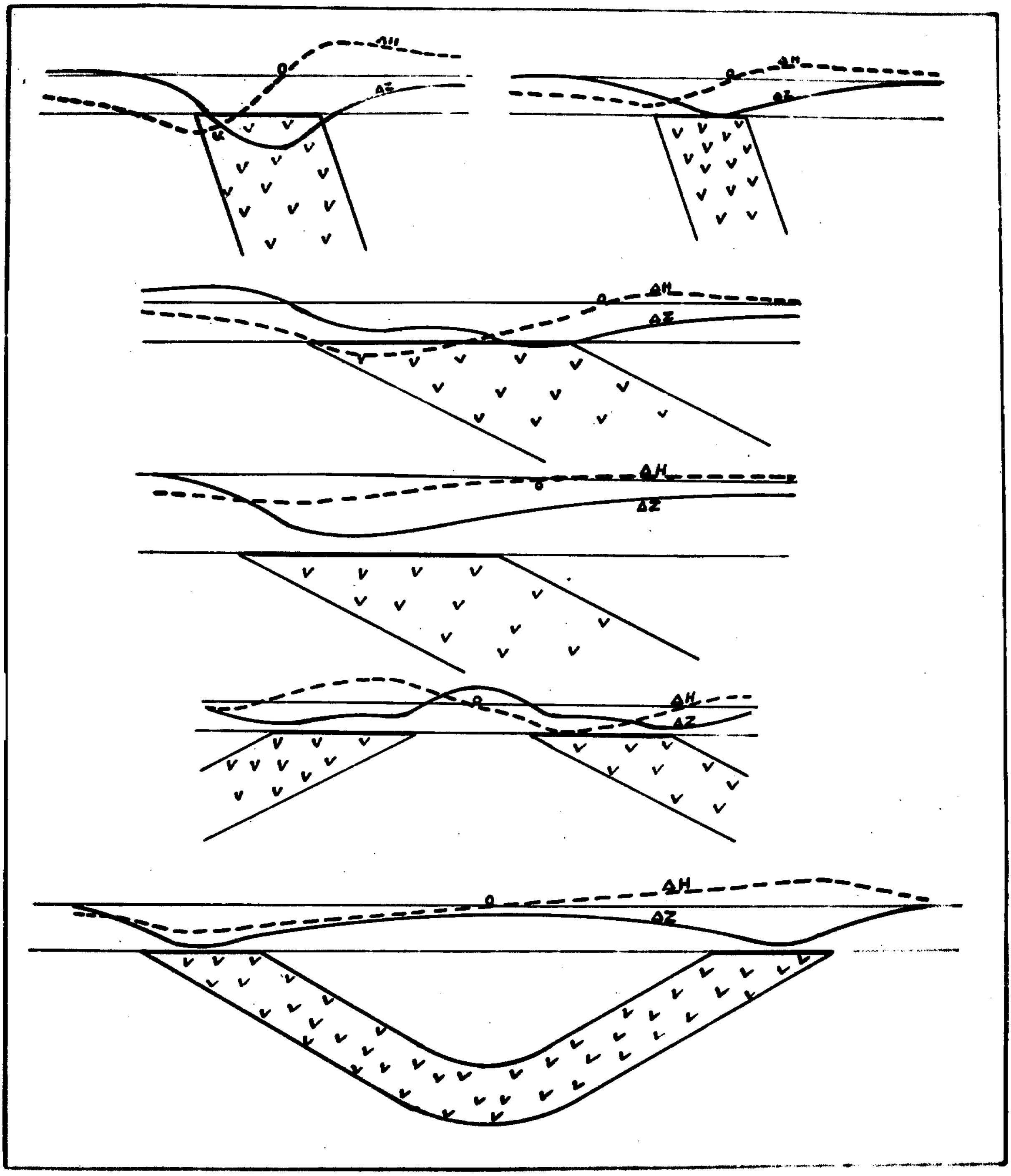

RELATION OF DIPPING MAGNETIC BEDS TO MAGNETIC
PROFILES OF INTENSITY

Plate IV.

The derivations of similar formulae as given above were first published by H. L. Smyth[9] in 1896. The original formulae were used by Smyth in conducting magnetic surveys of the iron deposits of the Great Lake Region.

The derivations of the equations given above for the case of disseminated magnetic deposits are not rigorous developments. But since the data obtained are subject to slight errors and more important still, is the fact that in nature we never find an exactly uniform distribution of magnetic material or even approximately exact geometrical shapes of magnetic bodies, such as must be assumed in order to obtain a mathematical expression for the various components of the magnetic effect. Hence these equations perhaps do not represent exact relationships, but they are of much value in delinating the general distribution and configuration of magnetic formations which are inaccessible within the outer part of the earth's crust. In other words errors due to approximations involved in the derivations are of less magnitude than the errors in approximating the distribution of magnetic material in a formation or the geometrical shapes of inaccessible magnetic bodies.

Therefore it may be stated that results obtained by these methods are not exactly quantitative in nature but in general the results are qualitatively correct.

In areas where the sedimentary formations are of a magnetic character, such as beds of magnetic sandstones, etc., it is possible in many cases to use profiles computed by such formulae for guides in solving the structural relationships.

[9] Monograph No. 36, U. S. G. S. Transactions A.I.M.E., vol. 26, 1896.

Nevertheless it can hardly be over emphasized that the magnetometer is but an additional tool for the geologist and that interpretation without application of geological data is likely to be in error.

Case of Polarization

This condition has not been treated very extensively in the literature and whenever discussed it has been regarded as relatively unimportant because it seemed doubtful to the writers if an interpretation could be applied successfully, even in a small degree, and doubtless this is the case in some instances. But some occurrences which have been investigated by the present writer seem to be susceptible of even a quantitative interpretation. Most writers attribute such magnetic anomalies to such causes as lightning and magnetic segregations and here again some doubt may be raised as these explanations do not seem adequate in the light of information gained by some of the more recent magnetic investigations.

In fact this case has been included with the condition of vertical magnetic bodies of infinite length by some workers, though most of these workers have recognized this condition as abnormal. But since this case has been observed very frequently by the author while making magnetic surveys in areas of igneous rocks and others doing magnetic work have related similar experiences, and because this condition does not necessarily represent a vertical body it seems quite proper to classify this magnetic situation as a separate type which perhaps is more common in its occurrence than is usually realized.

For the purpose of classifying this particular condition as a special type of magnetic anomaly it is necessary to define the condition in terms of its occurrence. Therefore in this paper the case of polarization shall be construed to mean a permanent bar magnet condition, represented by a heterogeneous magnetization which may or may not have a definite relation with the present direction of the earth's magnetic field. The magnetic character of the material possessing such magnetic properties must therefore be classed as ferromagnetic substances, i.e. substances which retain magnetism after the withdrawing of the magnetic field.

The field evidence for the case of magnetic polarization indicates a heterogeneous magnetization caused by some magnetization other than that produced by induction from the present earth's magnetic field. This statement is substantiated by the following:

1) Large vertical intensity anomalies of both positive and negative sign. (Only positive anomalies could exist in the northern magnetic hemisphere if magnetization was due to induction from the earth's field).

2) The presence of negative anomalies over topographic high points of igneous rocks.

3) The lack of relationship between the vertical intensity and the direction of the dip of the igneous rocks. That is to say, the lack of assymmetry in magnetic profiles measured over dipping igneous masses.

4) Tri-pole and multi-pole effects.

In some cases the negative anomaly or irregular polarization may be explained by the fact that if the magnetic mass dips to the south with a dip angle less than the critical angle, which is a dip perpendicular to the direction of the inclination, it will have a north pole developed at the upper end due to induction from the earth's field. However, we frequently observe such irregular polarities when the dip is greater than this critical angle. Dr. C. A. Heiland during one of his lectures explained such an irregularity, by assuming that the deposit had been completely overturned after having been magnetized in its original position and had retained a permanent magnetization in the secondary position. But the polarities, positive and negative, are frequently so irregularly distributed as for instance in basalt flows as to make such an explanation impossible. To explain this Dr. Heiland assumed that certain portions of the basalt solidified earlier than others, were magnetized, and changed position during the plastic movement of the flow, so that after the solidification of the sheet there were positive and negative poles seemingly irregularly distributed. Haalck of Germany has attempted to explain negative anomalies by differences in cooling of an igneous rock, he assumes that when cooling is slower more magnetite is segregated, so that there are portions of igneous rock which contain more magnetite than others. And since a fairly magnetic substance acts as a diamagnetic body if imbedded in stronger magnetic formations negative anomalies may be caused by this phenomenon. Whether or not this influence is sufficient to account for some of the smaller negative anomalies is a question which perhaps must remain undecided, but there seems to be considerable doubt if such segregations can produce the larger negative anomalies.

Dr. Heiland also reports that he has found rather large negative anomalies associated with metasomatic magnetite deposits where overturning was out of the question owing to the local structure and assumption that the deposits were inclosed in formations of stronger magnetic properties was impossible.

Another explanation is that these enormous negative anomalies may be formed by lightning, but this assumption only seems to fit the case when the magnetic formation has been exposed to the elements during a tremendous length of time. This theory is somewhat substantiated by the fact that many such polarities seem to occur very near the surface of the magnetic formations, but there are many exceptions to this too, as some calculations have shown that positive anomalies are sometimes due to south poles on the under side of a magnetic formation. But since many detailed searches for fulgurites in the vicinity of such irregular polarization have failed to reveal their presence we have very few facts which tend to prove this theory.

In this connection the author's attention has been called to some of the recent experiences in manufacturing magnets. It has been found that bar magnets can be made with three poles, one on each end and one in the center. The center pole may either be a north pole or a south pole. And thus, theoretically, any number of poles may be produced in a magnetic bar. Experiments have also been performed which show that such additional poles can be produced in uniformly magnetized materials by bending. The poles forming on the bent edges may be either north or south poles. Abnormal magnetization has also been produced by torsion.

Now if we consider the enormous stresses such as occur in nature we immediately realize that this explanation is also a possible solution to the problem. It is quite probable that forces of great magnitude are operating during times of intrusive action and if magnetic rocks react to distorsions or deformation as do magnetic iron bars resulting in abnormal magnetization, it would be very easy to account for the abnormal polarization in magnetic rocks.

A test of this theory involving deformation would perhaps lie in the investigation of an intensely deformed basic igneous rock. If the theory is correct one should find more abnormal polarity the greater the deformation the magnetic rock had undergone. One such test was made accidently by the author while making a vertical intensity survey for the Standard Oil Company of California. The sediments of this area contain a sheet of basalt (survey made in the vicinity of Somis, Ventura County, California) at a depth varying from 300 to 1500 feet and have then been folded forming a synclinal axis following along the bottom of the north side of the Arroyo Las Posas between Somis and Moorpark. The magnetic survey revealed a more or less narrow zone lying along the axis of the syncline which possessed the greater display of abnormal magnetization within the basalt. Many water wells in this area have been bored to the sheet of basalt and thus many checks on the calculations of the depths to the magnetic poles were obtained. Therefore it is quite convincing that the abnormal polarity is in the basalt and since the axis of the syncline has been the seat of more tension and compression than the limbs, it seems slightly more than a coincidence that the abnormal magnetization should be associated with the axis of the syncline.

In case the structure conforms with the polarized rocks or in case the basement rocks are polarized it is of value to calculate the depth to each pole and then sketch the approximate surface of the polarized material. This method serves to be very valuable in cases where granite core structure is polarized because very often it is possible to delineate the structure of the sedimentary rocks which lie above the granite core.

A derivation of an approximate formula for the calculation of the depths of poles in polarized rocks may be obtained rather easily by considering Fig. 11 below. Let us assume that we have a vertical intensity profile over a south magnetic pole buried at a depth equal to (d). Now if we let B be a point where the anomaly caused by the pole is half the maximum anomaly, and M be the unknown pole strength, we have

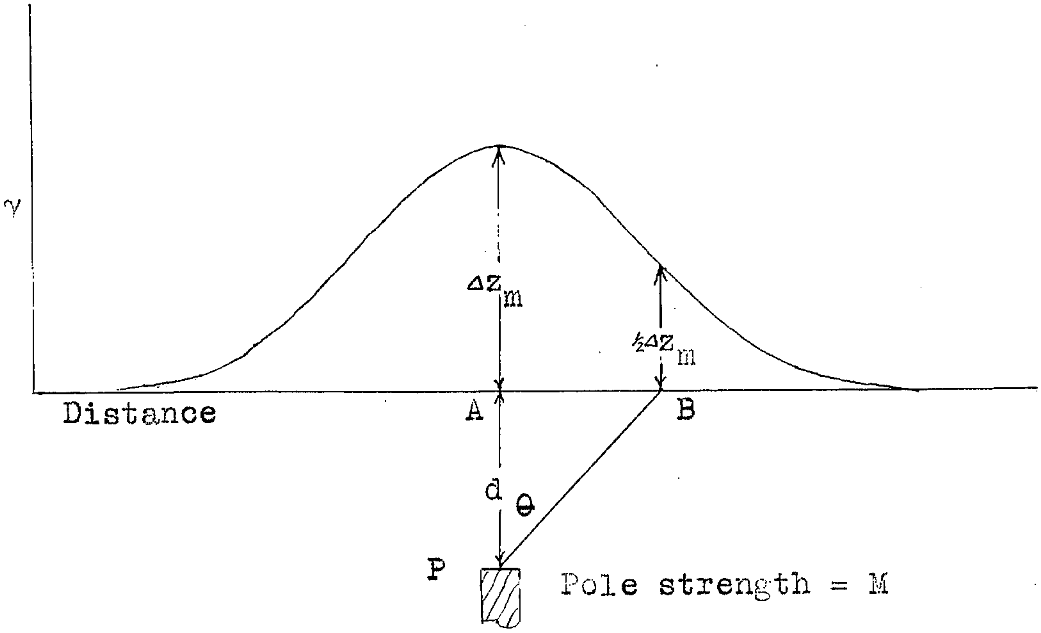

Fig. 11 Magnetic Pole and Anomaly in Vertical Intensity.

$$\Delta z_m = M/d^2$$

$$\frac{\Delta z_m}{2} = \frac{M}{2d^2} = \frac{M}{BP^2}\cos\theta$$

But $$\overline{BP} = d/\cos\theta$$

Therefore $$\frac{M}{d^2/\cos^2\theta}\cos\theta = \frac{M}{d^2}\cos^3\theta$$

$$\frac{M}{2d^2} = \frac{M}{d^2}\cos^3\theta$$

or $$\cos\theta = \sqrt[3]{1/2}$$

$$\theta = 54^\circ\ 12'$$

and $$d = \overline{AB}\cot\theta = 0.7212\ \overline{AB} \qquad (48)$$

Thus if one has a vertical intensity profile over a buried magnetic pole it is only necessary to determine the points where the anomaly is a maximum and one half of the maximum and measure the distance between these two points and then take approximately 72% of this distance as the depth to the pole.

This formula was developed by the author while investigating the magnetic anomalies found over the Oxnard plain and the depths calculated checked within the limit of depths to the basalt found by drilling. (See Plate VI).

A source of error in this formula is that it is necessary to assume that the magnetic pole is concentrated at a point where as a matter of fact the magnetic pole occupies considerable area. And to determine this area it would be necessary to know the depth but a qualitative notion regarding the area consisting of the magnetic pole may be obtained by inspecting the shape of the magnetic profile. In any event the point A in the figure must be taken as close to the point B as possible and still have the maximum value of the anomaly

PLATE VI.

Vertical Intensity Survey

Ventura Area

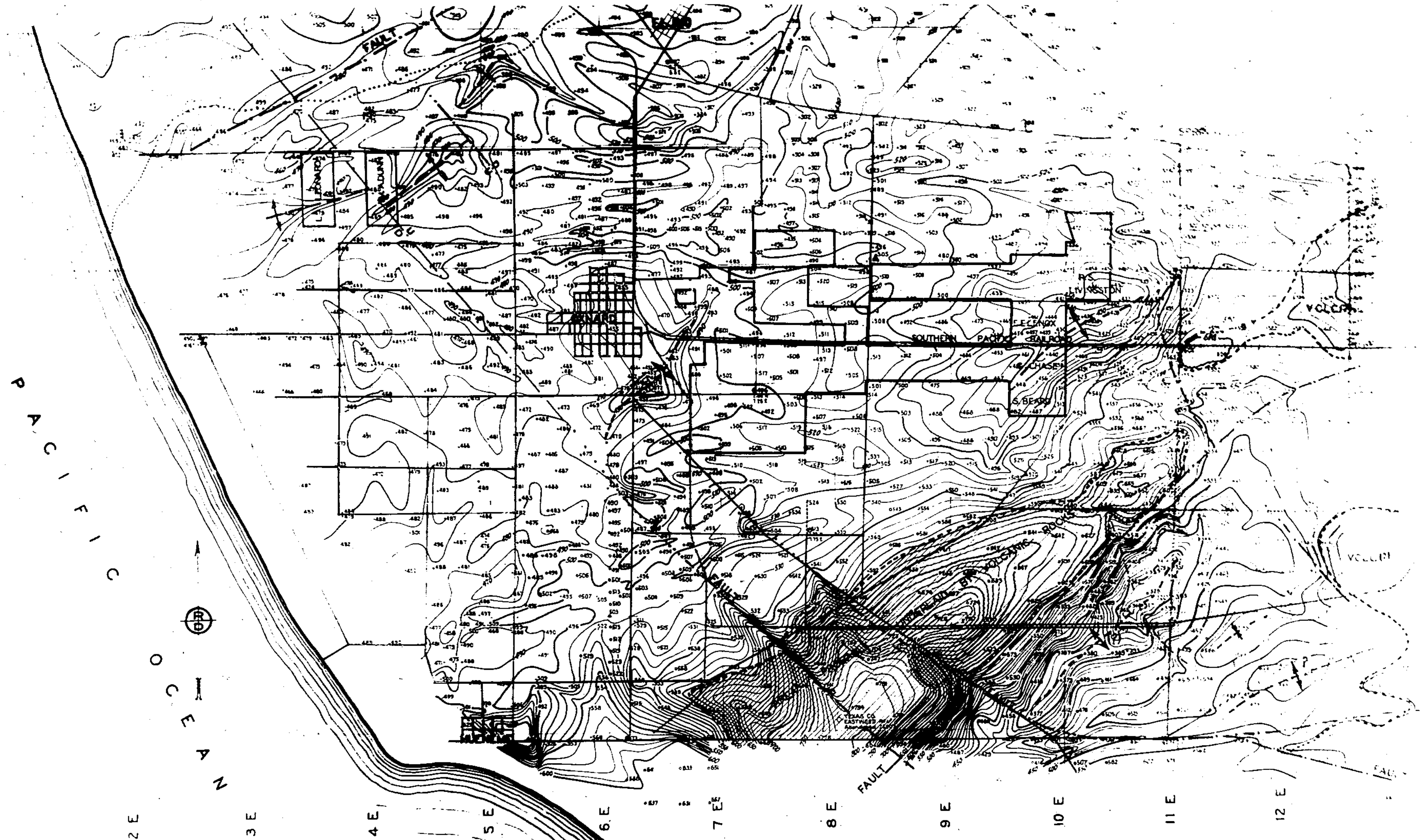

VERTICAL MAGNETOMETER SURVEY
VENTURA AREA
VENTURA - SATICOY - OXNARD - HUENEME

SCALE IN MILES
0 1 2 3

or very nearly this value. The formula best applies when the depth is great compared to the distance across the magnetic pole.

Faulted Magnetic Rocks

Here again we must reiterate that the calculation of magnetic anomalies due to various rock masses is not as simple a problem as it may seem upon a casual inspection. Haalck[11] has made several calculations dealing with a few cases on the assumptions that the magnetism is caused by induction of the earth's field, that the mass consists of material of uniform susceptibility, and that the masses are uniformly magnetized. The diagrams of Plate VII are slight modifications of Haalck's results showing the variation of the horizontal and vertical anomalies above faulted conditions involving a uniformly magnetized layer. The diagrams are drawn to scale and represent anomalies in their relative magnitudes, considering the same materials and magnetization.

The reverse problem of computing the size and shape of a magnetic mass from the measured anomalies, in general, is a very difficult problem and is seldom if ever done. As mentioned before, indirect methods are found more practical and as a rule it is rather easy to make useful and often very accurate deductions by comparisons of the observed anomalies with those due to ideal cases such as those shown by Plate VII.

It has been pointed out that three quantities are necessary for complete specification of any magnetic anomaly, but since very useful information can be obtained merely from determinations of

---

[11] H. Haalck, Die magnetischen Verfahren der angewandten Geophysik, pp. 47-64.

PLATE VII.

Theoretical Anomalies

Above Various Magnetic Mass Distribution

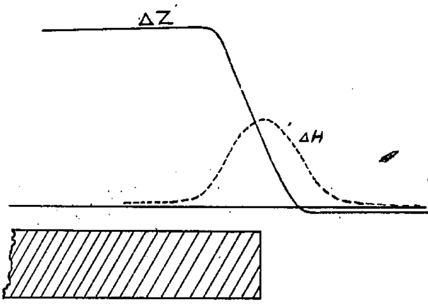

Figure 1.

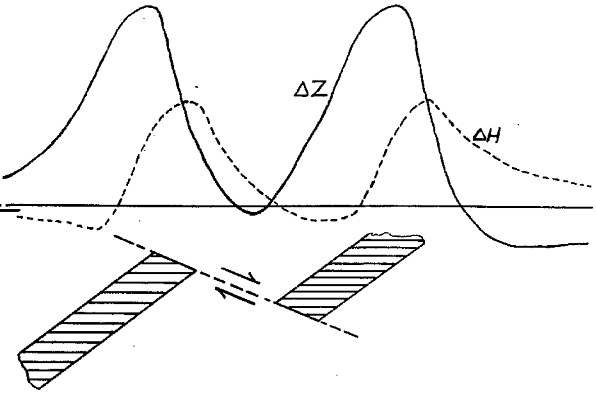

Figure 2.

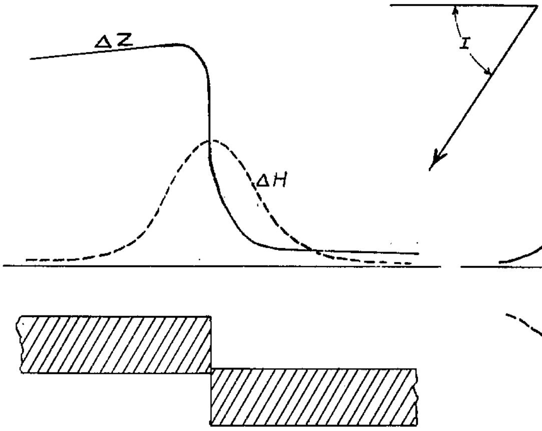

Figure 3.

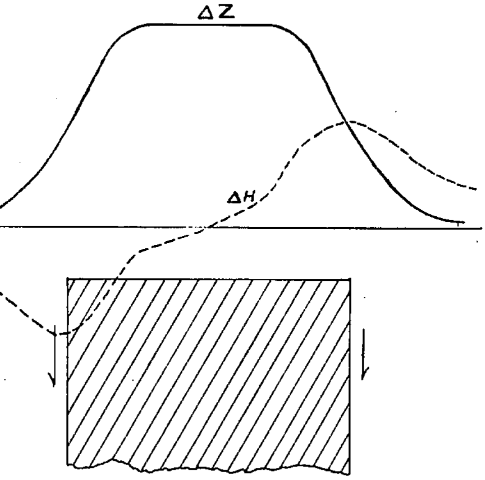

Figure 4.

THEORETICAL ANOMALIES OF HORIZONTAL AND
VERTICAL INTENSITY ABOVE VARIOUS MAGNETIC
MATERIAL DISTRIBUTION

vertical intensity above faulted or supposedly faulted zones, often only the vertical intensity anomalies are measured. The reason for this is illustrated by Plate VII. The interpretation of observed curves is easier for vertical intensity than for horizontal intensity, because the vertical intensity anomaly is usually a maximum directly over the edge of the mass concerned. There is one exception to this general statement, and this has to do with areas where the inclination is low, namely, near the magnetic equator. Where the inclination is high, namely, in the more poleward latitudes, the above statements apply very well. But where the inclination is low horizontal anomalies become more important, and therefore in areas where the inclination is very low measurements of horizontal anomalies may be more useful than those for vertical intensity.

The anomalies caused by faulting of ordinary sediments are usually of a very low order and often too small to be identified by the ordinary field procedure. Many large faults in California such as the Santa Clara River Fault show very small magnetic anomalies. This is partly due to the sediments in the geologic column, all having very nearly the same magnetic properties. Great depths to the more or less magnetic basement rocks may likewise result in very small anomalies.

Low angle fault planes are also a source of considerable difficulty in doing magnetic fault investigation work. The reason for this is that if the magnetic anomaly is primarily due to the displacement of the basement rocks the position of the near surface trace of the fault may be very distant horizontally from the magnetic anomaly due to the displacement irregularity. On the other hand if surface materials have very different magnetic properties, the anomalies may be so irregular that little information can be gained from the anomalies because of the irregular mass distribution which may be brought about by low angle faulting.

Magnetometer surveys in West Texas have indicated faults surprisingly well and have lead to the tracing of these faults for considerable distances beyond the surface indications associated with the faults. In this area there is obviously no marked differences in the magnetic susceptibilities of the upper few thousand feet of sediments to account for such magnetic effects. The anomalies in such cases may be due almost entirely to the displacement of basement rocks or deeply buried strata which have not been studied.

Interpretation by Disturbance Vectors

According to the theory of magnetic lines of force it can be shown that the disturbance vectors are tangents to these lines, and if the disturbance vectors can be drawn from field observations it is readily seen that the lines of force of a particular field may be approximated very closely. Having approximated the relation of the magnetic lines of force it is only necessary to assume physical conditions which do not conflict with the known geology and the depths. Then the positions and distribution of magnetic materials may be obtained by simple diagrams constructed for this purpose.

In order to draw disturbance vectors it is necessary to have horizontal and vertical intensity profiles over the areas to be investigated. The next and perhaps most difficult step is the eliminating of the normal intensity in order to obtain the data for the vector composition of the disturbance vectors which are due only to the magnetic masses associated with the magnetic anomaly.

There are several methods which are used to eliminate the normal field from the anomalies of the various magnetic elements. The first and perhaps the most used method is divided into two parts. Namely, the magnetic survey is brought to the same datum as the absolute values for the particular magnetic element. This is done by tying the magnetic survey to United States Coast and Geodetic Survey stations in the surveyed area, thus making the readings give absolute intensities instead of relative values. The second part is the subtracting from the absolute values the normal value of the particular magnetic element for the area under consideration. This gives values due only to the magnetic disturbances in the region. The above normal value is usually obtained by studying large general magnetic maps.

The second method is a process of averaging all of the values of a particular element for all stations in the considered area, thus obtaining a regional average which is considered the zero anomaly. This requires a large number of stations covering at least 400 square miles. After obtaining this so-called zero anomaly it is subtracted from all of the values, thus leaving only the residual caused by the disturbing influence in the area.

The third method and perhaps the most simple consists of picking up the average level of the profiles when they are relatively flat and the anomaly sticks up conspicuously. This average level is then called the zero anomaly and is used in the same way as the corresponding value was used above.

A fourth method is a graphical one based upon the theory that if one has a symmetrical vertical intensity high or low the horizontal intensity profile should also be symmetrical and the middle point between the maximum and the minimum values of the symmetrical horizontal intensity profile will correspond to the zero anomaly value of this particular magnetic element. Then if the inclination is known rather accurately, the zero anomaly for the vertical intensity may be readily computed. Then these zero anomalies are used in the same way as indicated for the three preceding methods.

After the component disturbance vectors have been obtained by any one of the four methods given above, they are resolved into the resultant disturbance vector which is tangent to the line of magnetic force at the particular station. The composition of these components is done for a station in the Norther Hemisphere by plotting the positive vertical anomalic vectors upward and the negative downward, the positive horizontal anomalic components to the north and the negative to the south. The method is illustrated fully by Plate XVIII, which shows disturbance vectors for profiles A-A' and B-B'.

In the case that the disturbance vectors are drawn over a magnetic pole they will give the direction of the disturbing field at the particular station and since the lines of force converge at the pole we may find the location of the disturbing pole if we can draw a magnetic force diagram so that it will fit the data given at the various stations. The drawing of such a field diagram is very difficult when one tries to fit the data directly, but the process is facilitated very much by drawing a set of theoretical force diagrams for different types of poles at various distances from the surface on ordinary tracing cloth or paper. Then one may place these diagrams over the disturbance vectors and find the one in the set that most nearly fits the observed data and in this way obtain the approximate depth and location of the disturbing center.

How to Plot a Magnetic Force Diagram

One very easy way to draw a force diagram is first to draw a circle around each pole with a radius proportional to the corresponding pole strength. Then draw an even number of equally spaced lines perpendicular to the axis of the magnet within each circle. The points of intersection of these lines with the circle will give points on various lines of force. A second larger circle is drawn with the pole as a center and the same number of equally spaced lines are drawn similar to the first set and the intersections of these corresponding lines with the particular circle in which they are drawn give points on the same line of force. Then draw other circles divided by the same number of equally spaced lines and repeat the process, etc. until the required force diagram is completed. In this manner a set of force diagrams can be drawn for use in the above analysis of disturbance vectors. These are most useful when investigating magnetic poles in formations or magnetic bodies beneath the surface of the ground. Attempts have been made to use them for determining the depths and positions of disturbing centers in connection with fault problems, but they have proven useful in cases which possess very regular magnetic anomalies. Irregularities lead to confusion and the results in such cases are too complex for analysis.

This is especially true when a part of the anomaly is due to local magnetic materials near and at the surface of the ground, namely, basic boulders, magnetic sands, magnetic metamorphic rocks, and ferruginous materials.

Relationship between Gravitational and Magnetic Anomalies according to Eotvos

Eotvos, like Haalck, assumed that we have a uniform distribution of magnetic material consisting of elementary grains or magnets each having its own magnetic poles. Using this assumption and considering the Newtonian potential Eotvos arrives at some very interesting relationships between gravitational and magnetic anomalies. These relationships are somewhat theoretical in nature, as they are very limited in the application of the two methods because the assumptions regarding magnetism are not in any sense very general and only apply when we are dealing with a uniformly induced magnetization. The relationships have given some very interesting results in some of the mid-continent areas where all of the magnetic conditions are satisfied. In other words, in any area where remnant magnetization exists the results will be confusing and possibly very misleading. It is fortunate in this regard that where remnant magnetization exists it is relatively easy to determine such conditions by magnetic surveys which will give clues as to whether remnant magnetization or induced magnetization is the predominating type of magnetism being dealt with in the particular investigation.

The main use of these relationships is found in the confirmation of one or the other type of geophysical investigation; namely, if after making a torsion balance survey of an area and computing the distribution of underground mass one is able to compute the magnetic observations in advance of a magnetic survey and find that the computed results are essentially the same as the later magnetic observations, considerable convincing evidence is presented in favor of the first interpretation from the torsion balance result. Thus the relationships not only serve as a check for the two methods but they also stimulate confidence in the correctness of an interpretation.

In the derivation of the relationships between gravitational and magnetic anomalies Eotvos first makes a comparison of the magnetic and Newtonian potentials. The Newtonian potential may be written as $k \sum \frac{dm}{r}$, where $\sum$ represents the summation of the mass elements dm, and r is the distance of the mass element to the point in question. But since he assumes, because of practical purposes, that the mass units are uniform in density, he writes

$$U = kd \sum \frac{dv}{r} \qquad (49)$$

as the volume multiplied by density (d) equals mass. Similarly he represents the total intensity of magnetization by the letter (j) and assumes that the surface of the magnetic mass is at a large distance from the observations, and then he writes the magnetic potential as

$$U_m = j \sum \frac{dv}{r} \qquad (50)$$

Therefore, if this is true, the relation between the magnetic and the gravity potential may be expressed as

$$U_m = \frac{j}{kd} U \qquad (51)$$

But in his assumption Eotvos has neglected the surface integral in the magnetic potential. It seems more correct to the author to express the magnetic potential as

$$U_m = c\int_v \frac{\operatorname{div} \bar{B}\, dv}{r} + \kappa\int_s \bar{B}\, ds \qquad (51a).$$

The same principle applies to the corresponding partial derivatives, force components, or gradients, only in such cases we must use the intensity of magnetization in the various directions instead of j and it is convenient to use a, b, and d as the components of the total intensity of magnetization along the directions x, y, and z.

If we express the increase of magnetic field in the x-direction due to a certain magnetic mass as the second partial derivative of the magnetic potential we may write this magnetic gradient in terms of the gravitational potential as

$$\frac{\partial^2 U_m}{\partial x^2} = U_{mxx} = \frac{a}{kd} U_{xx} + \frac{b}{kd} U_{xy} + \frac{c}{kd} U_{xz} \qquad (52)$$

Where a, b, and c are the components of the intensity of magnetization in the x, y, and z directions respectively, U_m is the magnetic potential, k is the constant of gravitation, d is the density of the mass to be considered, U_{xx} is the gravity gradient in the x-direction normally the astronomic north, U_{xy} is the rate of change of the north component of gravity in the east direction, and U_{xz} is the rate of change of the north component of gravity in the vertical direction. All of these gravity values can be obtained by an application of the torsion balance. Thus the gradients of the magnetic field may be computed from the torsion balance results providing that we know the magnetization constants.

Similarly we may write,

$$U_{myy} = \frac{a}{kd} U_{xy} + \frac{b}{kd} U_{yy} + \frac{c}{kd} U_{yz} \qquad (53)$$

$$U_{mzz} = \frac{a}{kd} U_{xz} + \frac{b}{kd} U_{yz} + \frac{c}{kd} U_{zz} \qquad (54)$$

These formulae apply to a single mass of a particular type which possesses the constant properties assumed.

However, in practice we are usually dealing with a mass possessing certain properties, which is completely surrounded by a second mass having different properties, and in such cases the author has found it very convenient to use the differences of corresponding constants of the two masses instead of computing the results separately for each mass and then obtaining the anomalies by algebraic addition.

Eotvos in his discussion states that the intensity of magnetization is due to induction of the earth's field and to remnant magnetism, but he does not consider the remnant magnetism in his analysis; he merely writes

$$a = \mu X$$
$$b = \mu Y$$
$$c = \mu Z$$

where X, Y, and Z are the magnetic force components of the earth's magnetic field and μ is the permeability of the mass considered.

Then for a particular region where both the magnetic and torsion balance results have been obtained experimentally, the values of a, b, and c may be computed from the permeability values and the components of the earth's magnetic field. In general these computed values will be applicable over a rather large area even though they may be obtained from a very local survey by both the torsion balance and the magnetometer.

PART IV.

APPLICATION

General Treatment of Magnetic Values Over the State of California

As an introduction to the application of magnetic methods to geological problems we have chosen to investigate the possibilities of correlating anomalies of vertical intensity with the regional geology of the State of California.

The information containing the magnetic data for the State of California was secured several years ago from the United States Coast and Geodetic Survey. This information is in the form of a map giving the locations of magnetic stations and the actual (1925) magnetic intensities of these stations.

To show the distribution of vertical intensity anomalies covering the state it was necessary to first adjust the magnetic values for the normal changes of intensity due to latitude and longitude for each station. Only an average value for these changes was obtained, namely, 13γ per mile for latitude and 5 to 7γ for the longitude adjustments. A centrally located station was chosen as a base station and the rest of the 158 stations were adjusted relative to this station. The values of the stations thus computed were all of forty thousand some odd gammas and in order to make the results more readable, $40,000\gamma$ were subtracted from the computed values so that the values would be $7,000^{\pm}$ instead of $47,000^{\pm}$ gammas. The next step was the drawing of isonomalic lines. The interval for the isonomalic lines was chosen as 250γ, first because, magnetic trends would not be

PLATE VIII.

Vertical Intensity Isonomalics
Of the State of California

ISONOMALICS OF VERTICAL INTENSITY OF THE STATE OF CALIFORNIA

SCALE

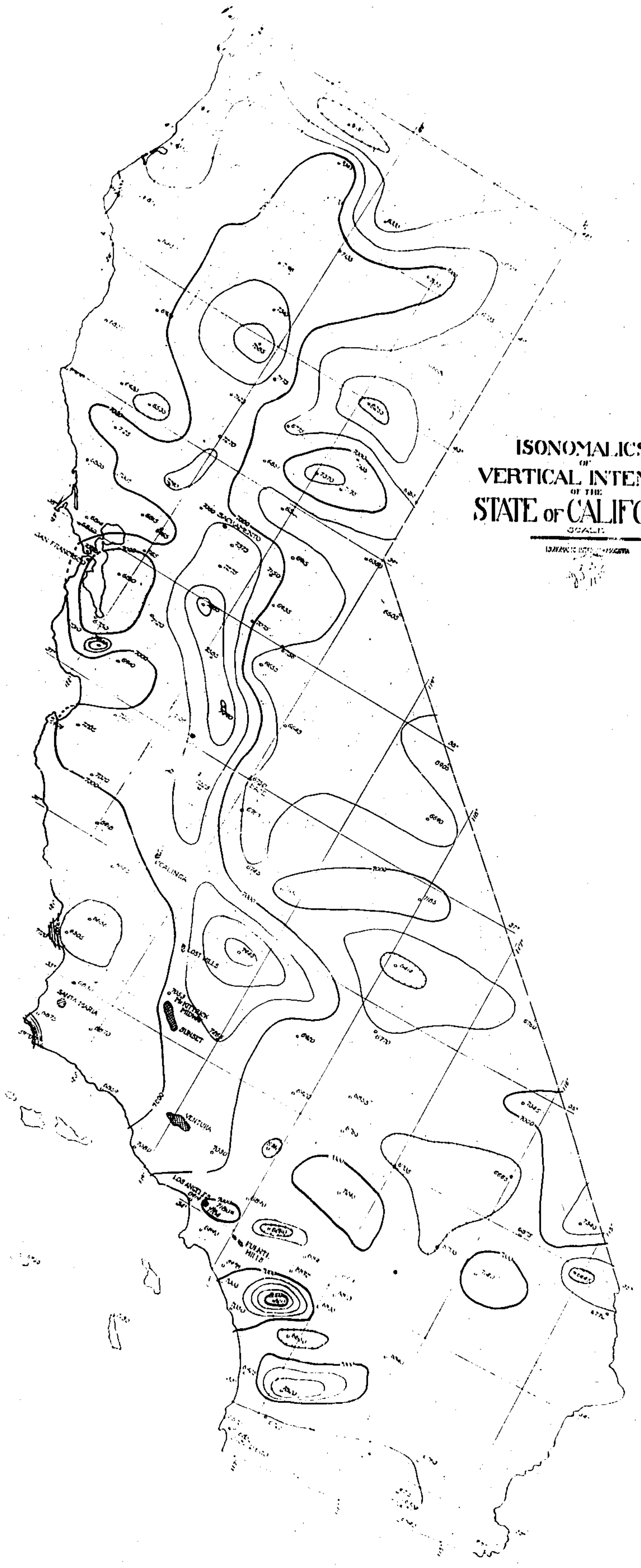

complicated by smaller and very local anomalies and second, because the data is not sufficient to warrent a smaller interval. In other words stations 40-60 miles apart do not represent magnetic anomalies sufficiently well to warrent a correlation of anomalies of low order with local geologic conditions. In fact objections have been raised against the using of such scattered data to even show regional effects as it is believed by some that values of each station is influenced primarily by local magnetic conditions. It is true that such large scale treatment results in maps which may bear very little if any resemblance to detailed surveys which have been made by placing stations at an average of one or two miles apart. But if the units are chosen large enough to be commenserable with the distance between observations some very general correlations may be made with the regional geologic conditions. It is the writer's opinion that an interval of 250γ is sufficient to allow for local effects which are undoubtly present at many of the stations.

Magnetic Features of the State of California

The most noticable features of the vertical intensity map as shown by Plate VIII are the magnetic highs associated with Quaternary deposits of the so called California Valley.

The geologic history of this region previous to Jurassic time is not well known. However, it seems as though up to the Lower Cretaceous, deposition took place in the California Valley. This deposition has been considered as marine and partly terrestrial.

Some geologists believe that at about the beginning of Lower Cretaceous time the area became a syncline and afforded a place for the thick sedimentary series derived from the rapidly eroded Sierra Nevada Mountains. Dr. Ransome[10] writes that in this region the Cretaceous and Eocene sedimentation took place along an open coast. The valley acquired its present form during the Miocene at the same time that the Coast Range was folded and uplifted. Ransome indicates that the valley was close to sea level and was a part of the peneplain of the Sierra Nevada until the latter was uplifted and tilted to the west during Pliocene. From Pliocene on the valley has had its present form.

Such a history seems quite uneventful to display such a more or less line of magnetic highs. It is very unlikely that such a distribution of highs represents a ridge in the basement complex as is the case so often found in Kansas, Oklahoma, and Northern Texas.

However, if we examine the map closely we note that most of the higher values of vertical intensity are found on the Sierra Nevada side of the longitudinal axis of the valley. This is quite significant as many geophysicists while engaged in making magnetometer surveys in this area found higher values on this side of the valley. In fact where the slates and basement complex are known to be very shallow on this side of the valley very high magnetic values have been measured by the writer in making studies of this area for the Standard Oil Company.

---

[10] F. L. Ransome, The Great Valley of California, University of Calif. Bull. Dept. of Geol. 1896, Vol. I, No. 14, pp 371-428.

A rule that seems to prevail is that the nearer the metamorphic slates are to the surface the greater are the vertical intensities. Basic rocks of this area also have some effect in this area so that one may comclude that the highs are caused by metamorphic and basic rocks which are tilted to the west and become deeper burried toward the western portion of the valley. Therefore. the line of highs may represent the zone where the metamorphic rocks cover the crystaline basement rocks at a relatively shallow depth from the surface or the highs represent an overlap of the metamorphics on granit. This conforms with the known geology of the valley as we know that the valley is assymetrical with the deepest part of the syncline near the southwestern margin.

The predominance of magnetic lows between the highs of the valley and the coast indicate that at some places the underlying magnetic badement rock is very deep and perhaps in other places the magnetic metamorphic and basic rocks are absent. It is true that greater rock masses are known to be of a metamorphic nature on the east side of the valley at the foot of the Sierra Nevada than at the west side of the valley along the Coast Ranges. Restating, one may say that the natural magnetic properties of the basement rocks are less on the west side of the valley than on the east side. The sediments are in both areas quite similar with respect to their respective magnetic properties and can hardly be wxpected to be the cause of anomalies appearing in such a large scale treatment.

It is noticable in the northwest part of the State and south of San Francisco, where the plutonics outcrop that the isonomalic lines extend out from the highs and include these areas. This indicates that the plutonics are magnetic in this region.

A few highs to the west in htis area may be accounted for by the possible presence of local magnetic poles in the igneous rocks These highs do not appear to be connected with the regional structure.

The Sierra Nevada region to the east of the California Valley has no striking magnetic features. The lack of magnetic highs and lows may be due to the few magnetic stations rather than to the lack of such magnetic reatures in this mountain area.

The attitude of this mountain range is due to an uplift accompanied by tilting to the west of a huge earth-crust block, consisting of compressed and heavily folded sediments together with granite intrusions and most certainly a more detailed magnetic survey ought to indicate some of the outstanding geological features.

The two magnetic highs and low in the northern part of the State are perhaps associated with some igneous conditions.

The series of magnetic highs in the southwestern part of the State seem to be difinitly related to the plutonics of this area.

Conclusions

The regional trends of geologic structure seem to be exhibited by the large scale treatment and the structure would have been more apparent if results could have been obtained from a larger number of stations.

The anomalies are of such magnitude that errors of considerable size would not have changed the results and thus it is demonstrated in no feeble way that the magnetometer may be used as a very inexpensive and effective tool in studying the detailed geologic structure of the older rocks of the State of California. However, local structure of sedimentary beds may not be readily obtained by the use of the magnetometer because the sediments are of such materials as not to be very magnetic. Consequently the anomalies due to the primary or secondary position of these sediments may be of such a low order that they may escape unnoticed by the geophysicist.

Application of Magnetic Methods To the San Andreas Fault

Introduction

The San Andreas Fault could not be correlated with any of the anomalies found by the general treatment of the magnetic anomalies over the State of California and as this fault is one of the most conspicious structural features of the Coast Ranges, not primarily due to its present activity but due to its great traceable length, it was chosen as subject for magnetic study. The study of this great fault has a double purpose, first, to demonstrate that the fractured zone can be correlated with magnetic anomalies, and second, to contribute toward the present knowledge regarding the southeastern extent of the ~~f~~ fault into the Salton Sink area.

The San Andreas Fault has been traced geologically for approximately 600 miles extending southeastward from Cape Mendocino, a point north of San Francisco where the fault presumably vanishes beneath the Pacific Ocean, to a point in the Salton Sink area about 120 miles southeast of Cajon Pass, a point north of the City of San Bernardino. According to Levi F. Noble, Andrew C. Lawson, J. P. Buwalda and others the great tear fault is marked by nearly straight and almost continuously traceable chain of scarps, ridges, and trough-like depressions, most of which involve Quaternary alluvial deposits and thus afford clear and unmistakable evidence of recent earth movements.

The fault is bordered on both sides by a zone of roughly parallel branching and interlacing fractures making up a geologic mosaic of elongated blocks or wedges of earth crust whose longer axes trend parallel with the main fault direction.

For a brief description of the rocks on the two sides of the faults the following quotations of Levi F. Noble[12] is very appropriate. "The profound difference in the rocks on opposite sides of the San Andreas fault shows that the fault movements have been of great magnitude. Although the nature of the movements is not entirely clear, they were evidently the product of compressive forces that produced a great shear zone along which the movements appear to have been partly horizontal and partly vertical. The fault is a very old line of weakness, upon which m movements have recurred through Tertiary and Quaternary time and perhaps through much of pre-Tertiary time. The movements are still in progress."

This profound difference in the rocks mentioned above refers to lithographic and petrographic differences which may or may not be associated with different magnetic properties, the most important of which is the magnetic susceptibility. In and along the San Bernardino Mountains Noble finds on the south side of the fault a quartz-sericite-albite schist containing beds of chlorite schist actinolite schist, greenstone, quartzite, and limestone. On the north side of the fault he finds Tertiary sedimentary formations and a complex assemblage of pre-Tertiary crystalline rocks of various ages, which are for the most part made up of bodies of massive granite, banded and contorted gneisses, and inclusions of limestone.

The following table of susceptibilites will in general indicate the magnetic anomalies to be expected over adjacent rock types as mentioned by the above discussion.

---

12. L.F. Noble, International Geological Congress Guidebook No. 15, 1933.

Table 3.

Susceptibilities of Rocks and Minerals

Material	Susceptibility (units of 1 x 10^{-6} c.g.s.)
Solid Magnetite	3 to 1.000,000
Illmenite	500,000
Hematite	3,000
Limonite	1,000
Pyrite	4
Galena	0
Rock Salt	-0.4 to -0.8
Basalt	8,000
Gabbro	3 to 6,000
Serpentine	2,000
Granite	1,000
Limestone	10
Dolomite	1
Clay, gravel, etc.	40

These values of magnetic susceptibility are only approximate and may vary as much as 20 times these figures but the order is in general correct. They represent averages of the values obtained by F. Stutzer, W. Gross, and the author while working with the Standard Oil Company of California.

Such general values are of no quantitative use because of their variation from one location to another, they serve as a qualitative indication as to why certain magnetic anomalies are obtained over a particular type of rock.

These very approximate values, however, serve as a means of computing the approximate anomalies which may be expected to exist over various classes of rocks though not for particular types of rocks. Such values have been computed and it is found that they agree remarkably well with the values of anomalies found in actual practice. Table 4 gives the ranges of anomalies over certain classes of rocks.

Table 4

Classification of Magnetic Anomalies

Range of anomaly	Rocks and Minerals
10,000 to 200,000γ	Large deposits of magnetite (Kursk, Russia; Kirunavaare, Sweden; Caribou, Colorado).
1,000 to 10,000γ	Basic and acidic volcanics, Gabbros, and peridotites.
100 to 1,000γ	Granites and large masses of igneous rocks poor in magnetite.
20 to 200γ	Sedimentary formations without large amounts of volcanic materials.

If we consider the types of rocks which we may expect to be on the opposite sides of the San Andreas fault in an application of Table 4 we immediately see that if there existed sedimentaries on one side, and say granite, schist, or gneiss on the opposite side of the fault, we may expect anomalies in the order of 200 to 800γ to exist in the neighborhood of the fault. On the other hand, if the same rocks existed on each side of the fault plane the anomaly may be very small, though the anomaly due to the particular type of rocks in the vicinity may be quite high. Nevertheless, if we assume the condition to exist as Noble has outlined we may expect anomalies of considerable size even though the surface of the country is buried quite deeply under alluvial material.

Therefore, we may conclude that it is quite possible to locate the subsurface fault trace in the buried country rock by magnetometric measurements even though no geologic surface indications are visible at the ground surface. A second conclusion is that if we knew the types of rocks giving the expected anomalies we would be able to compute the depth to the surface of the country rocks.

Field Methods and Results of Magnetic Investigation of the San Andreas Fault

During the Spring of 1930 a preliminary investigation of the application of the magnetic method to the problem of tracing the San Andreas Fault was made in the vicinity of Whitewater and Garnet Station in the upper part of the Coachella Valley. The members of the investigating party were Dr. Beno Gutenberg, Dr. John P. Buwalda, Mr. Robert Watson, and the author. The results of this investigation consisted of two magnetic profiles run at right angles to the San Andreas Fault. These profiles yielded magnetic anomalies exactly at the surface trace of the fault. The anomalies were of the type usually associated with fault conditions and the correlation of the anomalies with the known fault structure was very complete.

The positive nature of the results of the preliminary investigation were so convincing that they stimulated further work as a possible means of extending the San Andreas Fault beyond the point where it seemed to be lost from direct observation by alluvial overburden and general complexity of intervening crustal disturbances.

The following work consisted of running thirteen profiles which not only indicated the position of the San Andreas Fault more closely than had been determined by surface geology, but perhaps extended the main fracture approximately 60 miles in a southeastern direction from the most southern location where it had definitely been mapped.

The method used during the invesigation was very similar to the conventional system of making a barometer survey for elevation. A Schmidt type of magnetic variometer was used as a combined field and stationary recording instrument. The stationary observations are necessary to obtain the background readings so that the field observations may be corrected for the diurnal and other variations that may effect the magnetic component being studied. Instead of making a stationary continuous reading of the component, it was read at a conveniently located station at brief intervals during the regular field survey and a continuous approximation of the variation was obtained by interpolation methods. This procedure gave the necessary data for the correction of the routine field observations for diurnal effects; in addition to this temperature corrections were applied together with the latitude and longitude corrections. The resulting values were reduced in this manner so that if any variation was noted in the values, this variation could be attributed to geologic conditions which were associated with areal changes in magnetic susceptibility.

After these results had been computed they were plotted along the lines of section showing graphically the anomalies and the relation of the anomalies to the known geology of the area together with their relation to one another. The accompanying map, Plate XVII illustrates the magnitude of the anomalies as well as the position and trends shown by the profiles.

Discussion of Vertical Intensity Magnetic Profiles

The most northwestern profile indicated by A-A' on the map crosses the San Andreas Fault at a known point as indicated by Plate IX, a photograph taken from an airplane upon which has been sketched the vertical intensity profile. We notice at the point where the profile crosses the San Andreas Fault that the vertical intensity has a very steep gradient to the north, rising to about 60γ above the normal value of the vertical component. After attaining this value the gradient decreases and the intensity remains relatively high toward the north. As explained in a previous section of the paper, entitled Interpretation, pp.90 we note that this part of the profile is in very good agreement with the computed form of the profile showing the effect of faulted magnetic rocks.

A second very conspicuous feature of this profile is the magnetic high occurring about one and a quarter miles south of the fault. This particular anomaly has a value of approximately 150γ and is confirmed by sufficient observations to well establish its existence. This anomaly is well exhibited by several of the other profiles to the south and a further discussion will be given treating the anomaly as a whole.

At a point about two miles north of the San Andreas fault a second anomaly seems to be superimposed upon the main San Andreas anomaly. The value of the component is about 70γ above that noted at the fault and may be attributed to a branch of the San Andreas Fault,

PLATE IX.

View Looking East from above Whitewater
Canyon with Generalized Vertical Intensity
Profiles across San Andreas Fault

Photograph by Kennedy

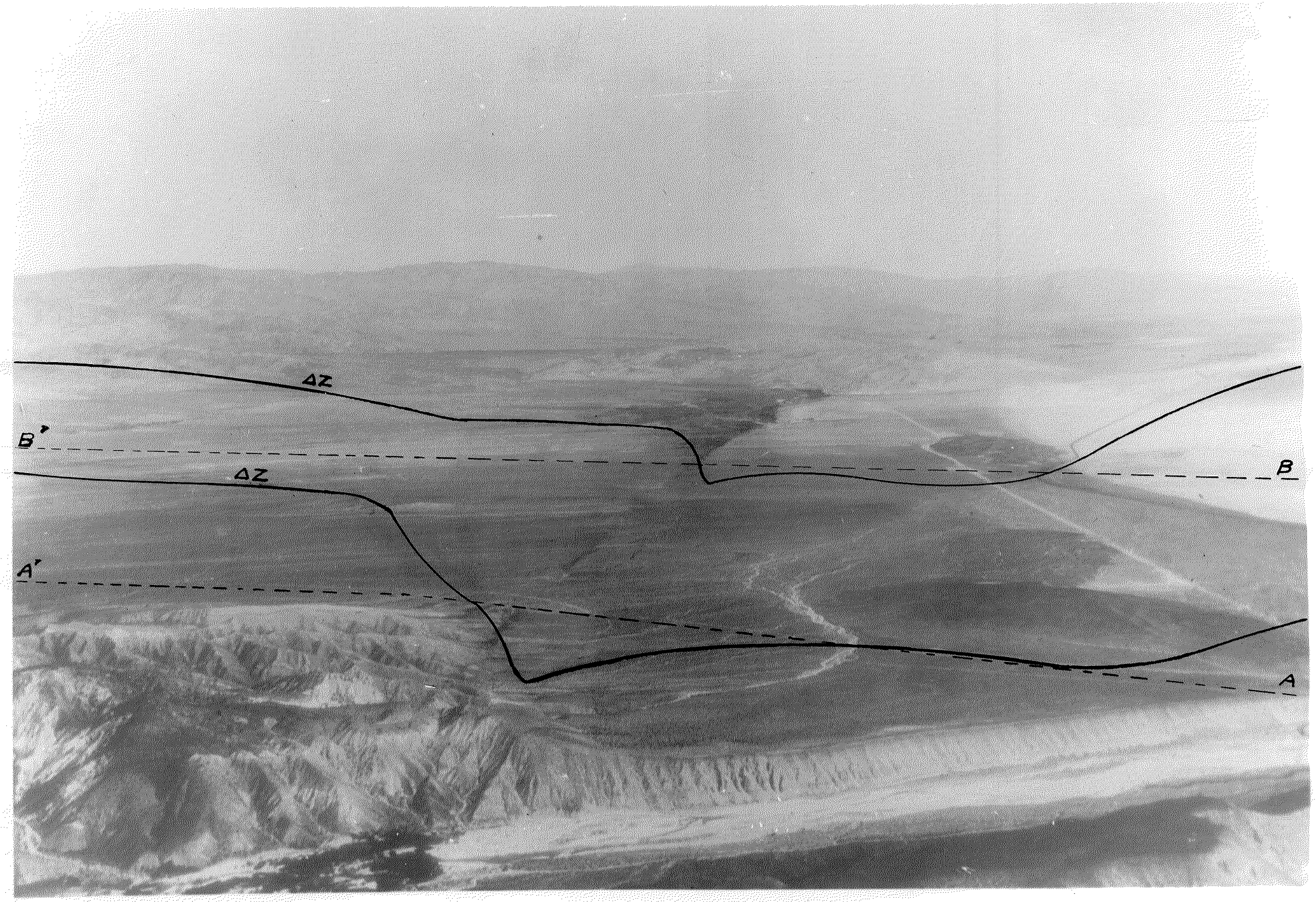
ΔZ
B'
B
ΔZ
A'
A

namely the so called Mission Creek Fault. The mapped trace of the Mission Creek Fault is slightly to the north of this point, but this may be explained by the fact that the branch fault plane dips to the south and the vertical offset of magnetic layers at considerable depth cause the observed magnetic anomaly at the ground surface.

The profile indicated on Plate IX by B-B' is very similar to profile A-A' with respect to the distribution of anomalies, though their values are slightly different. This difference is considerably more than any instrumental error possible in the survey of the two profiles. These differences may be due to changes in the petrographic properties of the underlying rock or to a marked increase in depth to the magnetic rocks. The two profiles are three miles apart and either one or both of the above suggested conditions may prevail. Nevertheless, the anomalic distribution relative to the known position of the San Andreas Fault is the same.

The short profile B"-B"' is less than three miles to the east of profile B-B', and was made for the purpose of investigating the increase of the anomaly between profile C-C' and B-B'. At the point where this short profile crosses the San Andreas Fault the topography is slightly irregular as the trace of the fault is marked by a small trough-like depression associated with a small scarp which may be due in part to the presence of a sand dune. Therefore, the increase of approximately 20γ in the anomaly at this point may be due in part to the surface irregularity, but as the next profile to the east has a very large anomaly at the point where it crosses the faulted zone one may be inclined to attribute this increase to variations of magnetic susceptibility on the two sides of the fault.

Profile C-C' passes through Thousand Palms Canyon and extends from the old highway in the south side of the valley to the north side of the valley at the base of the Little San Bernardino Mountains. This profile differs considerably from the other three profiles mentioned above, though its general features are very much in agreement with the sections to the west.

The magnetic high south of the Indio Hills is somewhat symmetrical in form and lies completely north of the present course of the Whitewater River. This eliminates the idea that the persisting anomaly is directly associated with the present course of the wash.

The vertical magnetic component is very much disturbed where the line of section crosses the Indio Hills. This in part may be attributed to topographic effects because the sides of the canyon are rather steep and rugged. The floor of the canyon is covered with various types of igneous rock boulders which also has an effect upon the magnetic measurements, but this effect was partly eliminated by careful selection of the station and averaging several readings systematically located about the principal station selected. The differences ranged from 0-14γ for the readings made for the purpose of averaging. The order of the topographic effects are limited by the low susceptibility of the sedimentary formations constituting the irregularities bordering the wash. If the canyon walls were of igneous rocks the effects would be much greater. Therefore, after considering all of these effects it seems quite improbable that the total magnetic disturbance found in the vicinity of the Indio Hills is due to these particular surface effects and we may conclude that since the disturbance anomalies are of the order of 65γ they must be due to some subsurface distribution of magnetic material. From geologic evidence on

PLATE X.

View Looking East Along the South Side
of the Indio Hills with Generalized
Vertical Intensity Profiles across
the San Andreas Fault

Photograph by Kennedy

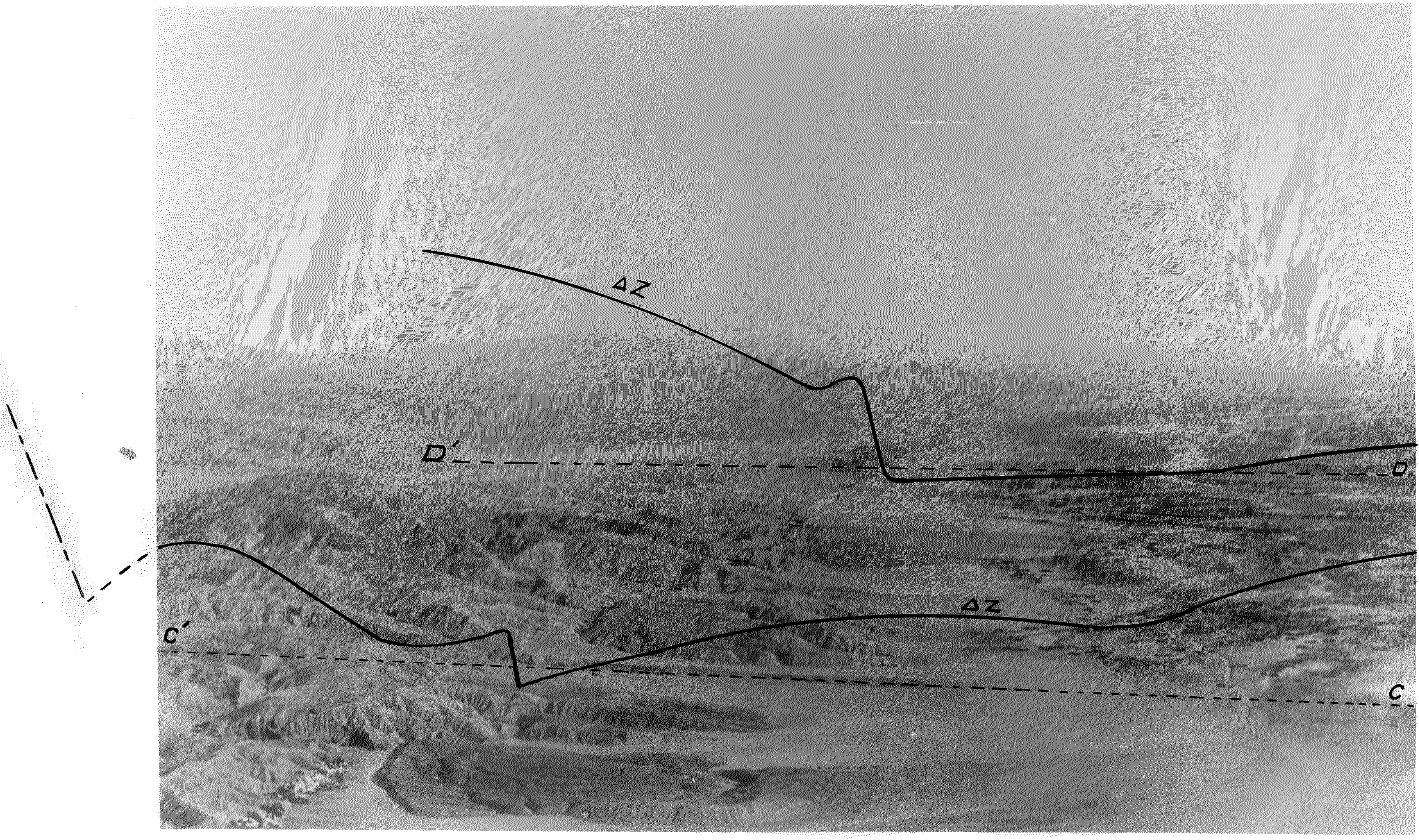
ΔZ
D´
D
ΔZ
C´
C

the surface (see Plate X) we are reasonably certain that this section of the profile is disturbed geologically by the San Andreas Fault, and in addition to this there are surface indications that the Mission Creek Fault joins the San Andreas in this vicinity. Hence, it is very suggestive that these magnetic disturbances are the effects of faulted rock materials of various magnetic susceptibility so that the masses are no longer continuous. A close examination of the profile reveals a magnetic condition somewhat similar to the one illustrated by Figure 2, Plate VII.

The magnetic gradient north of the Indio Hills is very steep, the measurement at the extreme north end of the profile being 500γ higher than a corresponding measurement at the vicinity of the fault. This rapid increase of the vertical component may be due to the shallowness of the more magnetic rocks as exhibited in the Little San Bernardino Mountains.

Profile D-D' arosses the east end of the Indio Hills running in a northeast, southwest direction and west of the Southern Pacific Railroad the profile is in an east-west direction. The anomaly above the San Andreas Fault at the east end of the Indio Hills is very characteristic of the anomalies of the other profiles to the west and little need be said about it.

The profile through Thermal indicated by E-E' indicates the location of the San Andreas Fault by an anomaly of 125γ at a point very near the east edge of the valley floor. This profile is of special interest because it is at this location that the San Andreas becomes too obscure to be followed easily on toward the southeast. A new feature becomes evident in this profile, at least a feature which is not conspicuous in any of the profiles to the west of this line of section, but it does occur in the profile passing through Mecca. This feature is the marked low at the town of Thermal and though it is rather small it is well established by several measurements. It is about twice as large as any error that may be attributed to instrumental technique. The prevailing high occurs just west of the center of the Coachella Valley and seems to preserve all its symmetry.

The profile passing through Mecca is 16 miles long and crosses tne entire valley, even penetrating the Mecca Hills sufficiently to confirm the magnetic anomaly which seems in the six profiles to the west to be very characteristic of the San Andreas Fault. The stations occupied on the east end of the profile are not located exactly on the line of section because of the difficult topography met in the Mecca Hills, but are located along the road to Blythe in the lower part of Shaver Canyon. The positions as indicated by the profile were obtained by projection and represent the anomalies as measured in Shaver Canyon and not the components that exist on the very steep slopes of the Mecca Hills. Nevertheless the anomalies are well established by the numerous stations and it is the opinion of the writer that they represent the magnetic conditions along the line of section better than corresponding stations would have on the very irregular and difficult topography. The vertical intensity low mentioned above seems to occur in this profile near Mecca. The more or less symmetrical vertical intensity high is located entirely on the west slope of the valley in the profile and suggests that the line joining the corresponding highs of the profiles is swinging more to the south.

The profile crossing the Mecca Hills is indicated on Plate XVII by G-G'. The values seem to be rather irregular along this line of section though the Mecca Hills are clearly associated with a magnetic high. This high may be correlated with the anticlinal structure of the Mecca Hills (see Plate IV, second figure from the bottom) but some doubt may be raised as to the structure of these hills, because no time was available for the writer to do very much geological observing except along the line of section. The profile crosses the hills along a large wash which is about a quarter of a mile east of a "wild cat well" owned by the Spindle Top Oil Association. The walls of this wash become rather steep as one proceeds up its gradient and these walls afford a casual inspection of the structure of the Mecca Hills along this particular line of section. The inspection revealed that the beds at the surface dipped to the southwest along the lower part of the wash course. The maximum dip recorded in this direction ranged between 15 and 20°. Near the head of the wash the beds are nearly horizontal and at the very head the bedding planes dip to the northeast with dips ranging from 25 to 30°. This very incomplete data was used to postulate the anticlinal structure for the Mecca Hills.

Just across the bottom of a large wash which separates the Mecca Hills from the Orocopia Mountains the vertical intensity possesses a very steep gradient increasing to the northeast. The maximum anomaly reached is of the order of 200γ and nine stations at the extreme northeast end of the profile indicate that the steep gradient no longer exists in this vicinity where the Orocopia Mountains begin to raise from the alluvial fan. This suggests that the underground conditions

Fiew of Mecca Hills along Profile

G - G'

PLATE XI.

View of the South Limb of the

Mecca Hills Anticline

are of the nature shown by Figures 1 or 3 of Plate VII depicting the theoretical anomalies as computed for faulted mass distribution, for discontinuous magnetic masses. From the magnetic data one may then infer that this represents one of two particular structural relationships, namely, first a fault bringing two different masses together with nearly vertical boundaries between them, the mass to the north having the greater magnetic susceptibility, and the second that the anomaly represents the southern boundary of an intrusive mass which may be the main body making up the Orocopia Mountains. In either case we must postulate a discontinuity of a type of magnetic material.

John S. Brown, in his Water-Supply Paper 497, states that the Orocopia Mountains consist of large amounts of extrusive trachyte and andesite together with a great deal of schist and gneiss. Also that the norther front of the mountains is very irregular and broken by great embayments in which large alluvial fans have been built up and above which at most places except the summit, the rock masses do not rise to great height. This, together with the fact that the southern front is rather steep and scarp-like in appearance suggests to Brown that these mountains may be a fault block elevated to the south and tilted down on the north at the base of the Cottonwood and Eagle mountains.

Brown's reasoning seems very plausible to the writer and with this evidence we may conclude in favor of the interpretation that the magnetic anomaly is due to faulting.

The rapid decreasing of the vertical intensity toward the southwest end of the profile indicates considerable magnetic disturbance and may be correlated with the San Andreas Fault. This correlation is made on the basis of the fault anomalies of the profiles to the north and south.

Profile H-H' is very similar to G-G' with the exception that it does not contain the same magnitude of the anomaly corresponding to the high which the Mecca Hills profile exhibits. A plausible reason for this is that it does not cross the main trend of the hills. In the main it can be said that whatever applies to the magnetic anomaly near the northeast end of profile G-G' also applies to the magnetic anomaly found along the eastern portion of profile H-H'.

Profile M-M' traverses the southeast trend of the Mecca Hills in a northeast and southwest direction. It extends from the north shore of the sea to the south front of the Orocopia Mountains. Near the sea shore the vertical intensity changes slightly over 100γ in about one-half mile. The resulting magnetic feature represents clearly the typical fault anomaly and when considered with the magnetic anomalies to the northwest one finds a strong indication that this anomaly is in good agreement with the San Andreas Fault anomalies. This profile, like the two to the northwest, indicates the Mecca Hills trend by high values. At the extreme northeast end of the profile a large igneous dike is traversed and a corrsponding magnetic anomaly of nearly 1000 above the normal values was observed along the line of section.

The next profile southeast of M-M' is indicated on Plate XVII by N-N' and the anomalies are very similar to the preceding. The San Andreas anomaly is well developed one mile northeast of the present sea shore. A second anomaly is present at the base of the end of the Chocolate Mountains and may represent a fault along the south front of them.

PLATE XI_a

Views of Pliocene rock pediment along profile M - M'

North of the Salton Sea near Bertram

Note: The folded and contorted Pliocene sediments illustrated by the small plunging syncline of the first photograph are located where the San Andreas Fault anomaly was found along the section M - M'.

Photographs by V. C. Kelley

Southeast of this profile the trend of the magnetic fault anomalies associated with the San Andreas Fault passes beneath the Salton Sea and it seems likely that the San Andreas Fault may extend toward the Obsidian Buttes southeast of the Sea. A detailed magnetic survey of the Obsidian Butte area did not reveal a definite fault anomaly, but a well developed trend of the isonomalics indicate a magnetic feature which parallels the trend of the San Andreas Fault (see Plate XX).

Profile I-I' also exhibits a typical fault anomaly and perhaps represents a fault along the south flank of the Chocolate Mountains. These mountains are known to consist of granites and vast quantities of volcanic rocks such as andesite and rhyolite, with perhaps some syenite and trachyite in the west end of the mountain range in the vicinity of the above mentioned magnetic profile.

Profile L-L' is slightly over fifty miles long and extends from Coyote Wells Station on the southwest side of Imperial Valley, through Brawley, across the Sand Hills via Mammoth Wash into the lower part of the Chocolate Mountains. The surface traversed by this line of section is nearly free from ingeous rock float which may effect the readings and the sediments are perhaps very thick so that any anomalies found along this line of section should be considered rather important even though the magnitudes are relatively small.

Near the extreme northeast end of the profile there is suggested a typical fault anomaly which corresponds very well with the anomaly found to the northwest in profile I-I'. These two anomalies may well indicate a fault along the south front of the Chocolate Mountains. At any rate, they suggest a marked change in the underlying basement rocks, which may be associated with volcanics known to exist in the area.

PLATE XII.

Reproduction of Seismic Activity Map Prepared by the Carnegie Institution of Washington

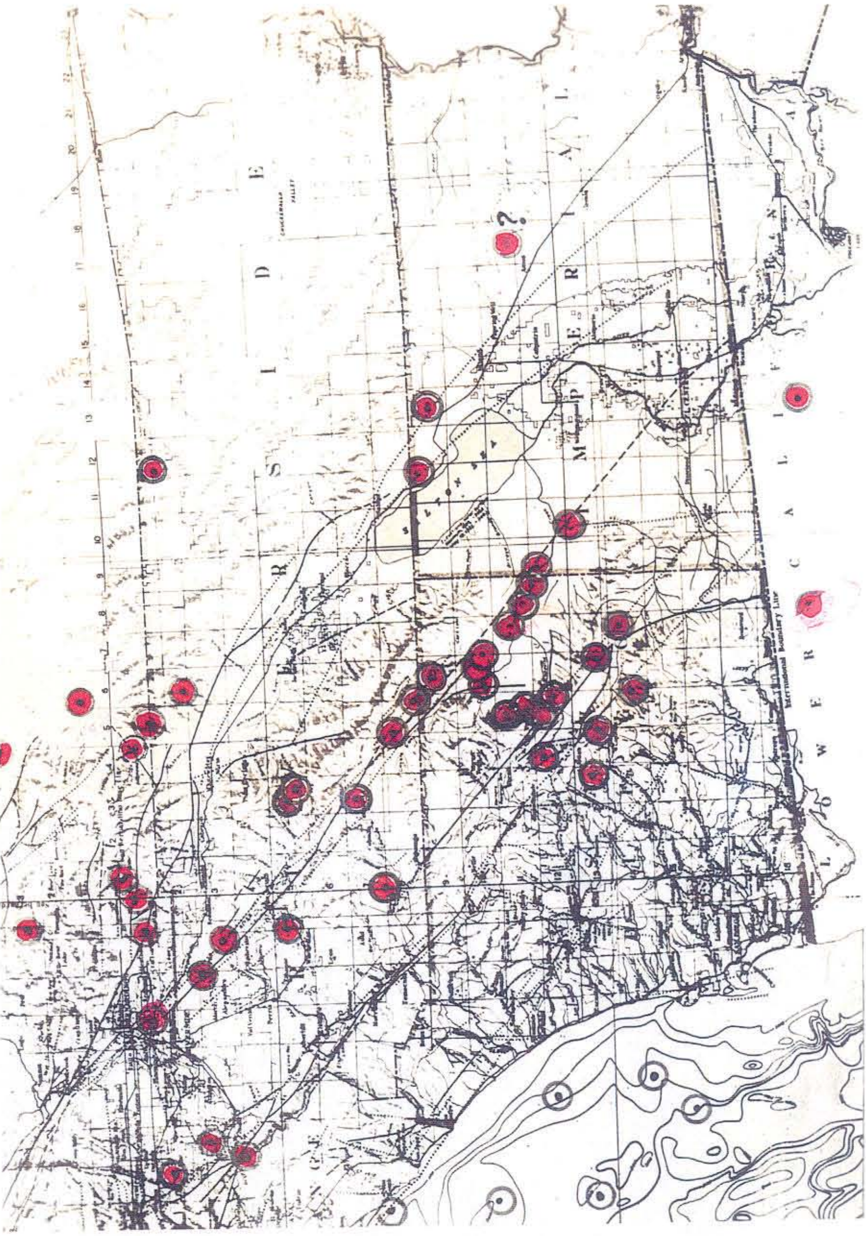
R I V E R S I D E
I M P E R I A L
L O W E R C A L I F
SALTON SEA
CHUCKAWALLA VALLEY
International Boundary Line
?

In the vicinity of the points where the profile crosses the New and the Alamo Rivers just northeast of Brawley a second anomaly exists. This anomaly is not very large, but is rather conspicuous along the line of section. In connection with this anomaly it is to be noted that the vertical component does not decrease to any marked extent as one goes northeastward along the profile. This strongly suggests that a rock mass, having a higher magnetic susceptibility than the sediments of the area is much closer to the surface along this northern part of the section than in the central part of the Imperial Valley. This mass may be interpreted as a fault block somewhat elevated or brought into the region by some horizontal movements. At first sight one might be inclined to think that the anomaly is associated with the volcanic activity portrayed by the Obsidian Buttes near the south end of the Salton Sea, but since the value of the anomaly extends over a distance of more than 20 miles it is quite likely that it is related to a larger feature than the Obsidian Buttes.

A little north and mostly west of Imperial a third very characteristic fault anomaly occurs along the profile on a point which is nearly exactly on a line with the north front of Superstition Mountain. This magnetic anomaly is very well established because of the good road conditions for frequent base station checks and the uniformation of station values is very striking.

As already suggested it seems from the physiography that a fault, if present along the north front of the Superstition Mountain uplift could be projected to intersect the profile at the very point where the anomaly exists. In this regard it is interesting to recall the mapped position of the southern part of the San Jacinto Fault. Fairbanks[13] shows the San Jacinto Fault extending down Coyote Canyon and several miles along the northeast side of Borego Valley, and Brown[14] states that this fault extends at least as far as the Borego Mountain. If one projects this fault line southward it passes just north of the Supersitition Mountain and would intersect the profile at the fault anomaly.

Another bit of evidence that this projected line actually is a fault is the active seismic activity along this projection of the San Jacinto Fault. Plate XII illustrates this very conclusively.

A fourth fault anomaly of this profile L-L' exists about four and one half miles west of Dixieland along the Old Spanish Trail Highway. Like most of the other places along this profile where fault anomalies occur no surface indications of faulting are visible but in the near vicinity of this point an interesting example of an unconformity was photographed by the writer at the time of making the magnetic survey (see Plate XIII). The presence of an unconformity showing considerable crustal tilting of the older beds suggests that certain crustal disturbances have been active in the area and that faulting may be hidden from view by the more or less horizontal recent sediments. Brown[14] also presents information that may suggest a fault in this locality. For instance he describes two faults which unite into one fault at Agua Caliente Springs and he suggests that this fault may extend along the north side of Carrizo Valley at the base of the Vallecito Mountains and Fish Mountain. If such a fault

13. H. W. Fairbanks, California Earthquake Comm. Report, p. 47., Carnegie Institution of Wahsington, 1910.

14. J. S. Brown, U. S. Water-Supply paper 497, p. 52.

PLATE XIII.

View of an Unconformity a few Miles
East of Coyote Wells Station

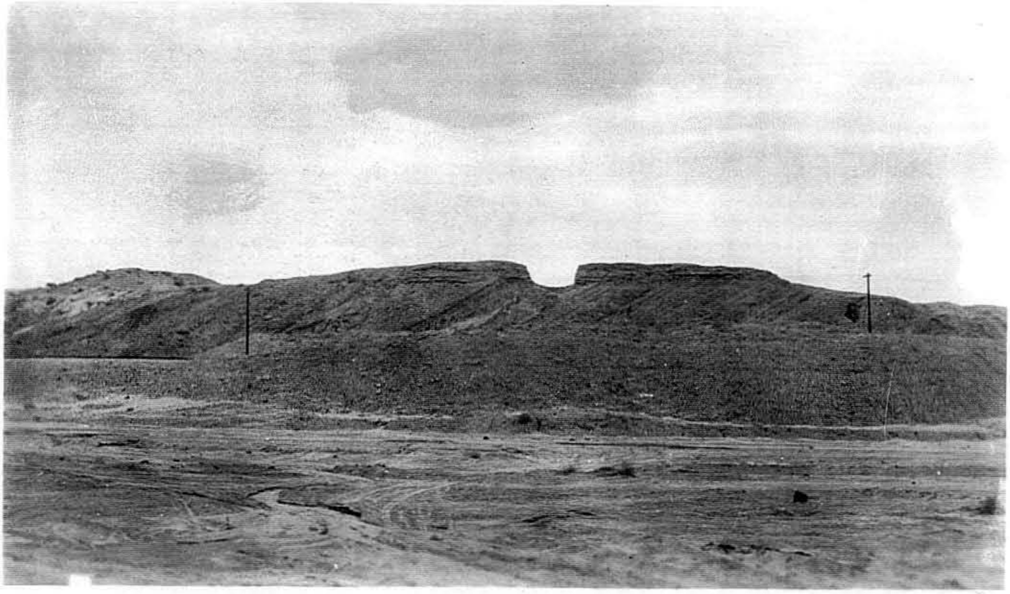

existed its projected trace would pass very near to the magnetic anomaly in question.

Two very short profiles were made along the southwest side of the Salton Sea to investigate the nature of the vertical component in this region. Profile J-J' is located just south of Travertine Point and extends from the base of the Santa Rosa Mountains to the edge of the sea. The purpose of this profile was to investigate any evidence that may show the extension of the magnetic high which is so well displayed by the profiles to the north along the western side of the valley. The results of this profile do not indicate the presence of the sought high.

The short profile K-K' is located about 10 miles east of the oil and gasoline station called Truck Haven which is a point along the Coachella-Brawley Road. This profile was run for the purpose of investigating the magnetic expression above some disturbed strata found by the writer while investigating the possibility of running a profile across the Salton Sea. This investigation proved that the idea was impractical because of the depth of the sea, though not impossible. At considerable expense a suitable support for the magnetometer could be constructed and doubtless under favorable weather conditions the measurements could be made.

Profile K-K' is about two and one half miles long and extends out in the sea to several islands which stand only one or two feet above the water surface. The vertical anomaly seems to increase as one goes northward, which may indicate that the disturbing geological features are even more seaward than the most distant island. It seems reasonable to assume that this increase in vertical intensity is in some way associated with the somewhat

View of Nearly Vertical Sandstone Bed
Striking North-South looking
toward the Northeast

PLATE XIV.

View of Sandstone Outcrops indicating
Geological Disturbances
Looking toward Superstition Mountain

confused surface indication of crustal deformation.

The writer was very much surprised to find indications of such crustal deformation, because all the information which had been assimilated from both written and oral communication precipitated the idea that the Salton Sink is a great waste filled basin with mountains surrounding it on three sides supplying the deposits which have, to a considerable extent, obliterated the evidences of origin and continuity of the structural features of the sink. This statement is in general true, but it seems that actual erosion of sediments in a secondary attitude, is going on at the present time at points near the central portion of the sink area. Plates XIV and XV illustrate not only the outcropping of shales and sandstones in this vicinity, but also hint the confusing attitude of the formations. The islands mentioned above consist of bluish gray shale beds containing sandstone concretionary material. The strikes and dips of these beds are very confusing, for example, beds of one island appear to have a strike in an east-west direction and a second island very near to the first may have a predominating strike of the shales in a north-south direction and the dips are even more disturbing to the casual observer.

Such disturbed strata may be interpreted as a crushed zone associated with faulting, but the evidence presented here is too meager to point toward the location of a large fault.

Views of Disturbed Sandstone Bed Striking Approximately North-South on the South Shore of the Salton Sea

PLATE XV.

View of Shale Outcropping on the same Island as shown above, however, the Strike is East-West and the Dip to the North.

Photos by V. C. Kelley

The Magnetic High which Extends along the Coachella Valley

Several explanations of the magnetic anomaly which extends along the Coachella Valley from the vicinity of Whitewater Canyon to the norther end of the Salton Sea have been suggested while dealing with the specific profiles, but none seem to be very adequate to explain such a large and persistant anomaly.

To begin this duscussion it might be well to enumerate the significant facts concerning this magnetic feature.

1. The anomalies are symmetrical highs along the profile sections ranging from 100γ to 190γ in magnitude.

2. The maximum part of the magnetic highs occur from about 3 to 12 miles south and west of the fault anomalies to the north.

3. The maxima if connected with a line would follow very nearly parallel to the mountain front on the southwest side of the valley.

4. Depths computed to the disturbing mass indicate depths of the order of 3 to 10,000 feet. The depths are not uniform, the shallowest points being where the valley is the narrowest and the deeper points where the valley is wider.

5. Qualitatively the profiles of both vertical and horizontal intensity indicate a rather narrow magnetic body at depth and the position of the maximum and minimum of the horizontal component indicate strongly that the body is discontinuous to the north and continuous, but rapidly becoming deeper to the south.

An interpretation based upon these facts alone would no doubt be somewhat speculative, but when the geology of the area is considered along with these findings we may find that all the conditions which fit the magnetic results may also satisfy the known geology we will have one interpretation which may or may not exactly fit the actual conditions. Only more thorough going methods of geophysics can prove or disprove such an interpretation.

Very good evidence is found along the northeast and east face of the San Jacinto Mountains indicating a fault. This evidence is corroborated by Brown[14] and in his statement that the rocks just west of Whitewater Point constituting the San Jacinto Mountain face are composed of pink and gray granite with considerable grayish marble, and that a tunnel in this vicinity penetrates these rocks exhibiting an appearance of a gigantic fault breccia with contact surfaces which are abundantly slickensided. Brown interprets this mixture of different rocks to represent step faulting consisting of successive breaks along many parallel lines making up the mountain face. If Brown's assumption is true it would not be contradictory to assume that the step faulting continued northward beneath the floor of the valley. This would constitute a type of mechanism to bring about the required mass distribution to satisfy the magnetic intensity curves. The vertical intensity curves require a mass with a rather high magnetic susceptibility, in fact if we are to assume that the magnetic anomaly is due to induction by the earth's magnetic field, the susceptibility would have to be of a value ranging among the highest values found for rocks. Rather than to assume a very basic rock or body of nagnetite at the required depths, it would seem more rational to postulate a type of rock that has a relatively high remnant magnetic property. Such a rock as the schists found in the area would satisfy this requirement. Cobbles of schist picked up along the profiles have exhibited remarkable polarity and have caused deflections of the magnetic balance as high as two and three scale divisions when the specimen was brought to within 20 or 30 centimeters from the magnetic element of the balance. Volcanic cobbles likewise have shown high permanent magnetism in the area, but to assume a large body of volcanic material would be rather spectacular. Another point that should be mentioned is that the anomaly can not be caused by granites of the type found makimg up the north face of San Jacinto Mountain. These pinkish granites contain very small amounts of ferro-magnetic material and do not exhibit very strong magnetic properties; this is well demonstrated by the small topographic effect caused by the face of San Jacinto Mountain.

If we are permitted to assume that the step faulting present in the face of San Jacinto Mountain involves larger slabs of rock toward the valley until the faulting approaches block faulting, we may imagine a relatively large block of say granite of the type making up the face of San Jacinto down faulted and tilted to the south. Then, if we can justify an assumption that this down dropped block is covered with a layer of schist as illustrated by Plate XVI we will have the required mass in the proper position to account for the anomalies as found along the southern portions of the magnetic profiles.

It would not be necessary to assume that such a narrow block existed along the whole length of the Coachella Valley, but that several blocks of various dimensions and depths make up the general underground structure of the valley.

This interpretation of this anomaly is certainly not unique, but only one of perhaps a great number of general solutions, but in the opinion of the writer it involves a minimum amount of speculation and may serve as a working hypothesis until more data is obtained by other geophysical means, such as seismic reflection work.

SUMMARY

The thesis has been divided into four parts; the first part deals with terrestrial magnetism, the second part treats magnetic instruments and their theory, the third part describes the methods of interpreting magnetic data, and the fourth part gives the application of magnetometric methods to tracing the San Andreas Fault.

Under the heading terrestrial magnetism the earth is treated as a magnet, embracing the composition of the earth's field, distribution of magnetism over the earth's surface, theories of origin of the earth's field, and reviews of the types of magnetic variation over the earth's surface.

Magnetic instruments are divided into two types, the permanent magnet deflection type and the balance type. The primcipal equation for all deflection magnetometers is given, and the influences of things such as changes of gravity and temperature are discussed. Several types of magnetic instruments are described.

The various methods of interpreting magnetic anomalies are investigated and it is concluded that the indirect methods are more applicable than the direct methods. Anomalies are divided into two classes depending upon the cause, and methods of analyzing these classes are given.

The application of the magnetic methods to the tracing of the San Andreas Fault is illustrated by surveying the known trace of the fault using the magnetometer. Then by applying the magnetometric method, attempts were made to extend the known fault trace into areas where the fault trace is obscured by alluvial overburden.

Typical fault anomalies were obtained and evidence for extending the San Andreas approximately 65 miles is presented. Magnetic evidence for extending the San Jacinto Fault is also given together with a discussion of seismic results which tend to identify the magnetic anomaly as being associated with the postulated extension of the fault.

Acknowledgements

The writer is indebted to several people for assistance in the field and many helpful suggestions as the work progressed. Particular credit is due to Mr. R. A. Peterson for assistance and checking the writer in the computations leading to the conclusions of this paper. Especial thanks are due Dr. S. P. Lee of the Chinese Geodetic Survey, Mr. V. C. Kelley, and Mr. L. F. Uhrig for their assistance in the field work. Appreciation is expressed for the aid and cooperation of Dr. Beno Gutenberg and Dr. John Peter Buwalda in the planning and execution of the research and field work involved in this problem. Mr. C. V. Stockman is credited with the furnishing of the negatives of the photographs of the San Andreas Fault.

Respectfully submitted,

Joshua L. Soske

[From *Terrestrial Magnetism and Atmospheric Electricity*, June, 1933]

DIFFERENCES IN DIURNAL VARIATION OF VERTICAL MAGNETIC INTENSITY IN SOUTHERN CALIFORNIA

By Joshua L. Soske

DIFFERENCES IN DIURNAL VARIATION OF VERTICAL MAGNETIC INTENSITY IN SOUTHERN CALIFORNIA

By Joshua L. Soske

Introduction

This paper sets forth the results of an experimental investigation of the diurnal variation in the intensity of the vertical component of the Earth's magnetic field in the northern half of Southern California. It also presents a discussion of the effect which the diurnal variation may have on the results of magnetic investigations of geologic features in this region. Attention was directed primarily to determining to what degree the diurnal variation is or is not constant over the various areas of the region regardless of the local weather prevailing at the different localities.

Southern California is divided into local topographic areas characterized by diverse atmospheric conditions. Areas open to oceanic breezes are frequently covered with fog and are consequently cool in summer; other districts closed to the sea by ridges may receive simultaneously extreme amounts of solar energy directly from the Sun, or may become heated by foehn or valley winds from adjacent regions. These variable local conditions of energy-absorption and radiation may influence earth-currents if they are considered as induced currents circulating in conductive paths in the Earth's crust. Any change in earth-currents would influence magnetic intensities by the amount of change in magnetic flux produced by the disturbed earth-currents.

It would appear from theoretical considerations that varying atmospheric potential-gradients may also influence magnetic diurnal measurements, but observational evidence on this point is not sufficiently abundant to be conclusive. In accordance with the theory assumed by J. G. Brown[1] in his recent discussion of diurnal variation of atmospheric potential-gradient at Palo Alto, California, it would seem reasonable to expect differences in diurnal variation of the potential gradient, if it were measured over the whole region under discussion. In the main, Brown assumes that the diurnal variation in the potential gradient is produced primarily by variations in the distribution of space-charge, brought about by temperature-changes resulting from expansions and contractions of the air, together with convection-currents which arise. Thus the problem which is presented by the above suppositions consists of many factors but the investigation discussed in this paper will treat these factors collectively rather than individually.

The author wishes to express appreciation for the aid and cooperation of Dr. Beno Gutenberg and Dr. John Peter Buwalda in the preparation of this paper. Especial thanks are due Dr. Albert K. Ludy of the United States Coast and Geodetic Survey for supplying magnetograms for the period during which the field-measurements were made, and also to Mr. O. J. Marrs, superintendent of the Fitzgerald Ranch for permission and assistance in establishing a temporary magnetic recording-station in one of the water-tunnels.

---

[1] Potential gradient, Palo Alto, California, Terr. Mag., 35, 1-15 (1930).

Importance of a knowledge of the diurnal variation

In the location and outlining of geologic features associated with large magnetic anomalies, satisfactory results can be obtained with rather crude instruments and methods. But where the anomalies to be expected are small, due to great depth of disturbing matter or the scarcity of magnetic materials in the geologic formations, more sensitive instruments and methods are necessary. There many precautions must be taken to secure results of sufficient accuracy for a logical interpretation in terms of geological conditions.

As it is well known that the elements composing terrestrial magnetism are subject to periodic and aperiodic fluctuations, known as diurnal or daily variations and magnetic storms of various types, it is important that the investigator using magnetic methods should know the magnitude and the time of occurrence of these variations in the area being surveyed, so that he may make the proper corrections.

The diurnal variation is greatest during the daylight hours; at night it is less pronounced and also generally less regular. The amplitude of the diurnal variation differs from month to month, in fact in a small way it varies from day to day. The extent and precise progress of the daily cycle at any given place depend largely upon the geographic latitude. The amplitude increases toward the magnetic poles, and the course of the variations becomes generally more irregular; near the equator, on the contrary, the variations are very steady and regular in their occurrence. The amplitude of the diurnal variations in vertical or horizontal intensity may amount to as much as seventy gammas ($1\gamma = 0.00001$ c.g.s. unit).

This clearly shows the need for a continuous record of the variations, both aperiodic and periodic, so that the visual readings taken in the field with the magnetic field balance can be adjusted to show only the geologic anomaly. Otherwise the diurnal and aperiodic variations may entirely obscure the presence of small anomalies. This necessary information may be secured from records made at magnetic observatories maintained by the United States Coast and Geodetic Survey or from temporary recording-stations maintained in the area under magnetic survey. If one uses the records from distant observatories two difficulties arise, first the data usually are received too late by the field man to be of immediate use and, second, where the distance between the nearest observatory and the area under survey is considerable, the information does not serve the purpose because of reasons which will be discussed later.

The solution of the problem would seem to lie in the establishing of a temporary terrestrial magnetic observing-station in the area where the magnetic measurements are in progress, so that the variations in intensity would be recorded uninterruptedly while the visual field observations are being made.

It has been suggested by men in search for oil-bearing structure that in regions like Southern California one such temporary recording-station would not suffice for the whole territory because there seems to be some evidence that the diurnal variation is not the same for the whole region. The suspected difference in the diurnal variation was attributed to the diverse atmospheric conditions of the local topographic units.

In order to investigate this problem it was only necessary to establish diurnal-variation recording-stations in the various topographic units of the region and then compare the diurnal curves of these stations with respect to amplitude and phase.

Apparatus and procedure

Only one complete set of automatic recording-equipment was available; it was set up and operated at one station for the whole period of the investigation. This necessitated visual recording at all of the other stations.

The recording-set is of the photographic type designed by the Askania Corporation for field use. It consists of a recording-drum driven by a clock and a vertical-intensity variometer in which the telescope has been replaced by a mirror-attachment.

The precision of the magnetograms obtained by the automatic recording-device is much the same as of those prepared from the visual readings. The time-element of the charts was controlled by a precise lever-clock and the time could be determined with an accuracy of three minutes, this being represented by one millimeter distance on the charts. The vertical intensity of the charts was estimated to one-quarter of a millimeter, which represents very nearly one tenth of a scale-division as read on the visual field-balance. The temperature-change was easily estimated to one-tenth of a degree Centigrade as a deviation of 7.2 millimeters was recorded for every change of one degree.

The problem in operating the equipment was, first, to secure a location free from all magnetic disturbances caused by culture, such as electric railways, power-plants, and passing automobiles. Second, there must be provision for keeping the recording-instruments in darkness and, third, for maintaining a constant or very slowly changing temperature. All of these requirements were met in an adit driven 125 feet into the granite of a canyon-wall about two and one-half miles north of Tujunga, a town 15 miles west of Pasadena. The adit is on the Fitzgerald Ranch and furnishes a portion of the water-supply. It is about one-half mile from the private road leading to the main buildings of the ranch and the location was thus ideal, being undisturbed by magnetic disturbances caused by traffic or wandering visitors.

The adit is parallel to the magnetic meridian, facilitating the setting up of the apparatus. Installing three blankets as curtains at the portal afforded the required darkness.

The wrapping of the sensitized paper on the drum was done in the late evening when the outside temperature of the air most nearly approximated that of the adit, so that entering did not cause a perceptible change in the temperature of the recording-instruments. In this way the magnetograms did not show a change of more than one or two degrees Centigrade during 24 hours of recording.

The constants of the recording-apparatus were all determined before taking it into the field and again after it was placed in the adit. Each determination gave 8.4 gammas per millimeter deviation of the vertical-intensity line and one-degree change in temperature gave 7.3 millimeters deviation of the temperature-line, which compares with 7.2 millimeters in the laboratory. The influence of temperature was determined by a heating-and-cooling arrangement which was operated through several ranges of temperature, together with several rates of warming and cooling, and in this way it was found that the influence was practically a linear one for both the recording-instrument and the visual-reading instrument. In the case of the recording-instrument the influence amounted to 1.8 gammas which was to be added to the reading for each degree Centigrade increase in temperature and in the visual-reading instrument the temperature was determined to be 2.1 gammas per degree change in temperature.

As above indicated the constants of the visual-reading balance were determined at the same time as those of the self-recording instrument. The scale-value was adjusted to the value of 21.3 gammas per scale-division. The artificial fields used in the determinations were measured by galvanic methods.

It is to be noted that estimating the deviations of the intensity-variation curve of the megnetograms to one quarter of a millimeter, the variation can be read to the nearest two gammas, but if one allows for a lag of one degree Centigrade in the temperature between that of the thermometer and the effective temperature of the magnetic system, a possible error of three or four gammas may result. But due to the very slow temperature-changes in the adit, it is very unlikely that a lag of one degree in temperature ever existed during the recording-time. The accuracy of the visual balance was of the same order of magnitude as that of the recorder. The readings were estimated to the nearest tenth of a scale-division which is equivalent to two gammas and if we allow for one-degree lag in temperature, we have the same possible error as before. It is, therefore, evident that the instruments gave approximately the same accuracy and the results should be comparable.

The next step after establishing the recording-station was to locate stations for visual observations at points where different local conditions prevailed and where also no magnetic disturbances from culture would affect the readings. At each selected station a non-magnetic shelter was erected. This shelter consisted of canvas attached to a wood frame with brass screws. A favorable place for the stations was in clumps of trees. The purpose of the shelter was to avoid exceedingly rapid changes of temperature which might be caused by air-currents coming directly in contact with the instruments. The vertical-intensity visual balance was set up in the usual way but the magnetic system was released and remained released throughout the day. Meanwhile the visual readings were taken at time-intervals of 15 or 30 minutes. These readings were converted into gammas and the temperature-correction was applied; a graph was then prepared showing the time and variation at a glance. A graph of similar scale was prepared from the magnetograms so that a close comparison of the two independent results could be made.

Since the diurnal variation is small during the hours of darkness and most magnetic methods of investigating geological problems are carried on during the daylight hours, visual readings were not taken during the nights.

Discussion of data

Through the kindness of Dr. Albert K. Ludy of the United States Coast and Geodetic Survey, blue-print copies of the magnetograms recorded at Tucson, Arizona, were secured so that diurnal curves from a more distant observatory could be compared with those obtained in this region.

Ten of the most typical curves (Fig. 1) were selected and plotted

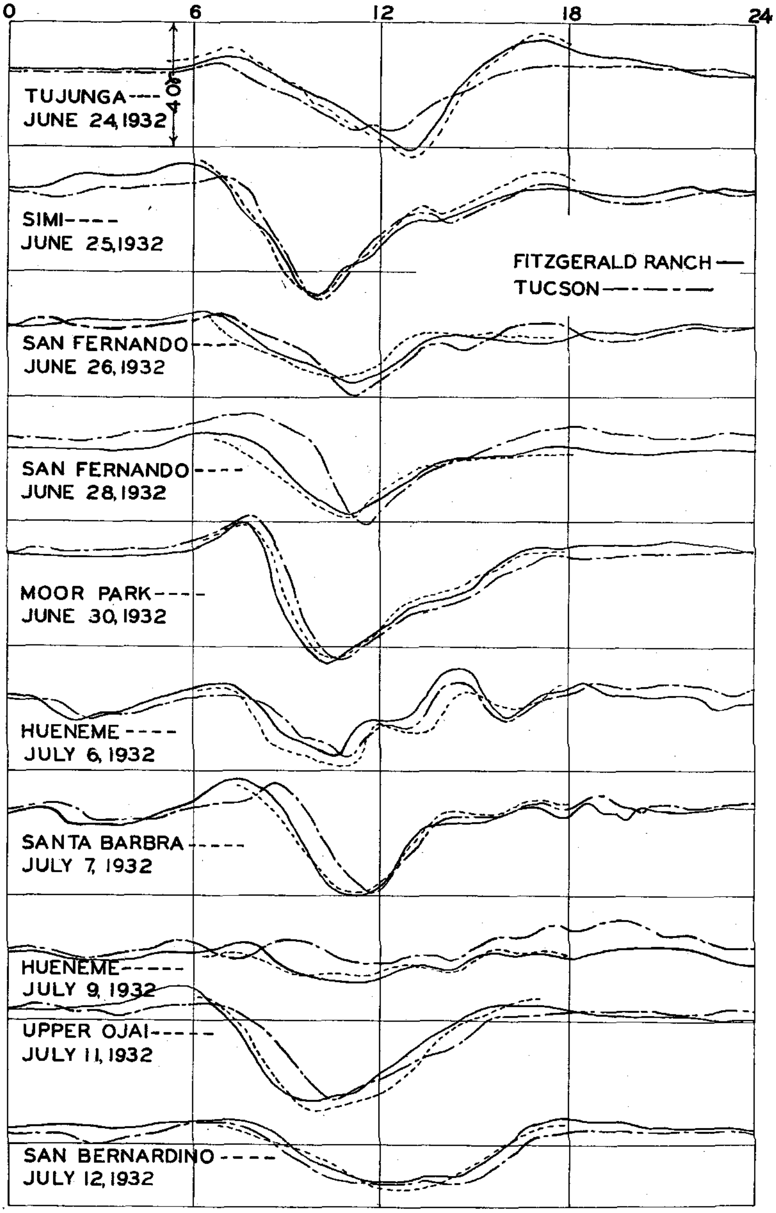

VERTICAL INTENSITY

FIG. 1

together with corresponding Tucson curves, to show the various degrees of disturbance as well as the relationships of the curves.

The first impression given by the diurnal curves is that the irregular change is the predominant feature, but if the records of the less disturbed days are studied more closely, one finds that they show general features which repeat themselves with considerable regularity; maxima and minima of rather definite values occur at quite definite times of day.

The curves representing the diurnal variation for the days June 24, 25, and 28, 1932, were obtained under similar atmospheric conditions, except that for those from Tucson the weather data are not known. The latter four curves show a general agreement with those from Southern California as to form and amounts of variation except that the Tucson record of June 28 shows in the forenoon a greater degree of deviation from the two California curves. The general agreement is within the limit of errors in the obtaining of the independent results.

It is also interesting to note that the visual readings at Simi were taken in an area of Basalt flows and the vertical-intensity anomalies in this area are very large—700 to 3,000γ are not unusual. And since the curves correspond very closely one might infer that a change of terrestrial-magnetic flux, caused by the diurnal variation, does not induce a change of intensity sufficient to cause a marked difference between the real and apparent diurnal variation in spite of the presence of highly magnetic formations. Two other curves not reproduced herewith, were read in this magnetically disturbed area, but no particular differences could be noted.

The visual curves taken on June 30, July 6, 7, 9, 11, and 12, 1932, were obtained under very different temperature and weather conditions from those existing in the vicinity of the self-recording station. At Hueneme, July 6, 1932, the temperature ranged from 18 to 26 degrees Centigrade and was accompanied by intermittently, faintly shining Sun, while at the self-recording station the temperature ranged from 25 to 35 degrees with a very brilliant Sun. A mild sea breeze was quite noticeable at Hueneme station but wind was not noted in the area near the automatic recording-station. Very similar conditions existed on July 7 while visual readings were in progress at Santa Barbara station. At the Upper Ojai visual recording-station on July 11 the temperature ranged from 26 to 38 degrees Centigrade while at the self-recording station temperatures of 24 to 32 degrees were recorded by a maximum and minimum thermometer near the portal of the adit; both places had a brilliant Sun. Very similar conditions prevailed on July 12 while the visual station was located at San Bernardino.

Although there were certain disturbances which affected the curves somewhat there is no indication that the diurnal variation for any day was different at the two recording-stations by an amount sufficient to impair the use of any one record for a corresponding day anywhere in the entire region. The curves for Southern California also show a rather close relationship to the curves recorded at Tucson, though there are some differences which must not be overlooked.

In most cases the difference in diurnal variation between the California and Tucson curves is insignificant, but where the curves show aperiodic magnetic disturbances there is usually a difference in phase between the two curves. This difference is apparent because the variation is plotted against local mean time but if the variation is plotted against Greenwich mean time there is a very close agreement in phase of the aperiodic variations and a corresponding difference in the phase of the periodic variation.

Conclusions

The evidence obtained in this research indicates that the diurnal variation is nearly constant over the whole region investigated, and there is no indication that the same would not be true of even larger areas. This, however, does not eliminate the hypothesis that local diurnal variation is not to a very small degree a function of the local weather-conditions but it does demonstrate that the effects of local weather upon diurnal variation of vertical intensity are not of any consequence in magnetic methods of geophysical investigation. That is to say, the effects of local weather upon diurnal variation are probably less in magnitude than the errors of our present instruments.

The comparison of the diurnal vertical-intensity variation curves from Tucson with those from Southern California demonstrates the possibility of developing errors by attempting to use records made at distant observatories for the correction of field magnetic readings taken for the purpose of detecting very small geologic anomalies. The diurnal variations, it is true, strongly indicate that they are related in some way to the position of the Sun above the horizon and thus an allowance for differences in local mean time must be made if records of distant observatories are used to correct for diurnal variations. But it often occurs that other variations, notably the short aperiodic ones lasting an hour or two, are superimposed on the periodic diurnal variations in the record and then the apparent variation as shown by the record is only partly governed by local mean time. Therefore it would be inaccurate to cover them by using the records of a very distant observatory with an allowance for the difference in local mean time. Any attempt to differentiate between variations which depend upon mean time and those which do not would probably prove unsuccessful.

The solution of the problem is in the establishing of a temporary terrestrial-magnetic station in the area where the magnetic methods are in progress, so that the variations in vertical intensity may be recorded uninterruptedly while the field-observations are being made. A second solution which is often practiced, is to use the field-instrument as a combined recording- and field-instrument; this merely requires repeating observations at a base-station as often as the accuracy of the work demands in order to obtain the hourly progress of the diurnal variation. With these repeated observations a diurnal-variation curve can be drawn which will yield the approximate back-ground readings needed for correcting the field-station values for the magnetic variations occuring during the progress of the day. A third method for the correction of magnetic values for diurnal and aperiodic variations is suggested by interpolating values of the variations for areas which lie in between two terrestrial-magnetic observatories. In general this method would be limited because of the lack of well distributed observatories.

Balch Graduate School of the Geological Sciences,
California Institute of Technology,
Pasadena, California.

NOTES

(See also page 153)

10. *American Geophysical Union*—The fourteenth annual meeting of the American Geophysical Union and its sections took place in Washington April 27, 28, and 29, 1933, the Section of Seismology holding joint sessions with the Eastern Section of the Seismological Society of America. At the general assembly, nine resolutions emanating from various sections were unanimously approved, two of which refer to matters falling within the scope of this JOURNAL, namely (1) That the Union regards with satisfaction and approval the progress of the International Polar Year program, recognizes the great value of the results, and expresses the hope that the International Polar Year Commission will be able to find means for complete analysis, discussion, and distribution of the data obtained, and (2) that the Union recommends that wherever possible, support be given to the plan of the Carnegie Institution of Washington and cooperating agencies to establish at certain fixed observatories apparatus and equipment for recording cosmic rays photographically and continuously.

In the Section of Terrestrial Magnetism and Electricity progress-reports on earth-resistivity measurements, world survey of cosmic rays, magnetic work in Canada, Mexico and the United States, and the International Polar Year were presented. Special papers were also delivered which dealt with atmospheric ozone and the sunspot-cycle; magnetic anomalies in Alaska; spectra of the night sky, zodiacal light, aurora, and cosmic radiation of the sky; interpretation of the resistivity-method for horizontal structures; transatlantic radio as related to magnetic and solar activity; apparent effect of magnetic activity upon secular change; and the problem of vertical earth-currents.

The meetings were all well attended and the reports presented indicate that, in spite of the unfavorable economic conditions, good progress is being made in America along all the lines of scientific research represented by the Union.

11. *Magnetic work in East Africa*—The projected magnetic survey-work in British East Africa by Director A. Walter of the British East African Meteorological Service, in cooperation with the Carnegie Institution of Washington, has been delayed by the absence of Director Walter in England and various other causes arising from the unfavorable economic conditions. The work, however, has now been resumed and the stations at Kampala and Nakuru have been occupied.

12. *Magnetic work in China*—An Askania earth-inductor and Smith portable magnetometer have been recently acquired by the Physics Section of the National Academy of Peiping. It is planned to obtain in the near future comparisons with the provisional international magnetic standards through the assistance of Messrs. F. Brown and C. T. Kwei who are doing cooperative work in China for the Department of Terrestrial Magnetism of the Carnegie Institution of Washington, after which the regular magnetic work of the National Academy of Peiping will be begun.

13. *Magnetic secular-variation stations in South America*—P. G. Ledig, observer of the Department of Terrestrial Magnetism, who is occupying secular-variation stations in South America, has secured observations at the following places: Mollendo, Santiago de Chile, Puerto Montt, and Magallanes. At the last place he assisted the Chilean observers, Messrs. Troland and Matassi, in establishing a magnetic station, securing instrumental comparisons, and adjusting the magnetograph at the Chilean Polar Year station. He will next occupy repeat-stations along the Atlantic coasts of Argentina and Brazil.

TERRESTRIAL MAGNETISM
AND
ATMOSPHERIC ELECTRICITY

An International Quarterly Journal

Founded by
L. A. BAUER
Conducted by
J. A. FLEMING
Department of Terrestrial Magnetism, Carnegie Institution of Washington
With the Co-operation of Eminent Investigators.

CONTENTS OF THE JUNE ISSUE

PUBLISHED FOR
THE JOHNS HOPKINS PRESS, BALTIMORE
THE RUTER PRESS, 420 PLUM ST., CINCINNATI, O.
THREE DOLLARS AND FIFTY CENTS A YEAR   SINGLE NUMBERS, ONE DOLLAR

E. G. ALLEN & SON, Ltd.,
14 Grape Street,
LONDON, W. C., 2

THE JOHNS HOPKINS PRESS
(Cash Subscriptions)
BALTIMORE, MD.

Entered as second-class matter at the Post-office at Cincinnati

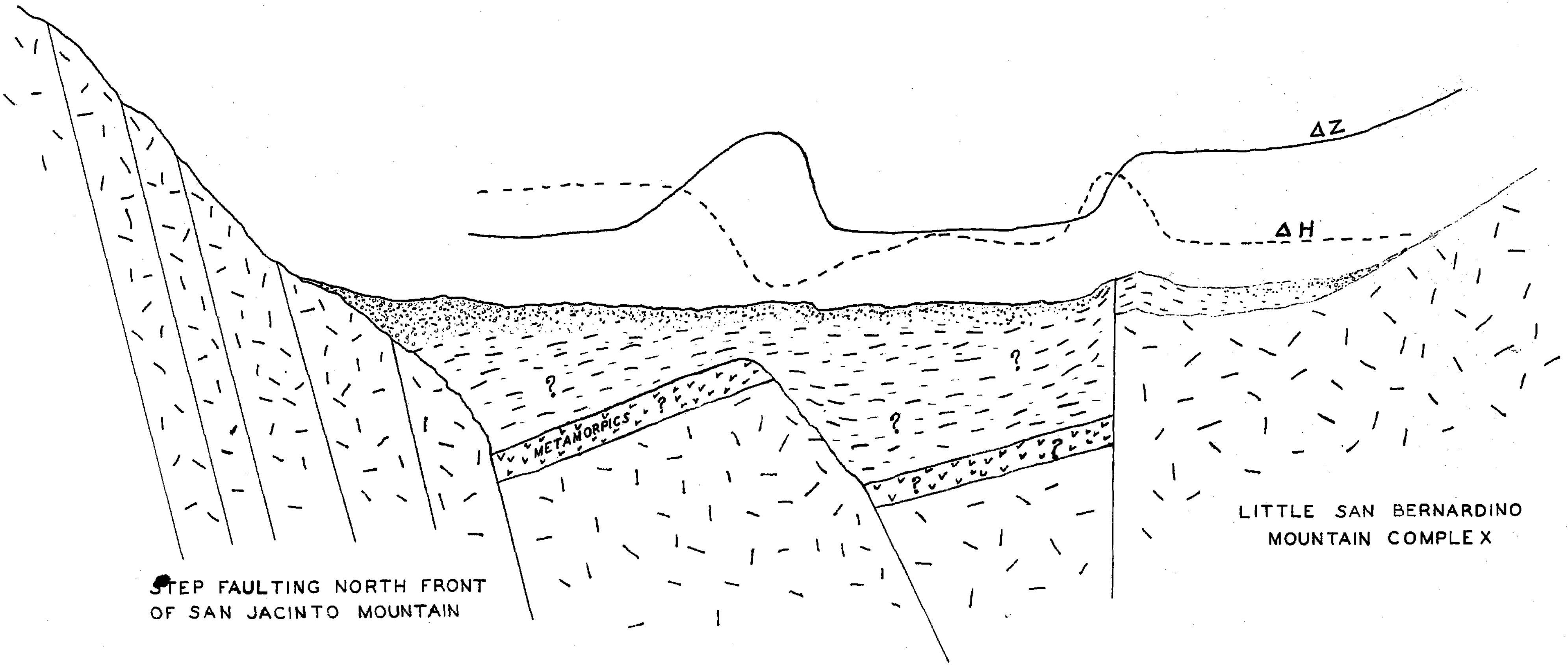

PLATE XVI.

HYPOTHETICAL SECTION ACROSS UPPER
COACHELLA VALLEY SKETCHED TO AGREE
WITH MAGNETIC PROFILES

J.L.S.

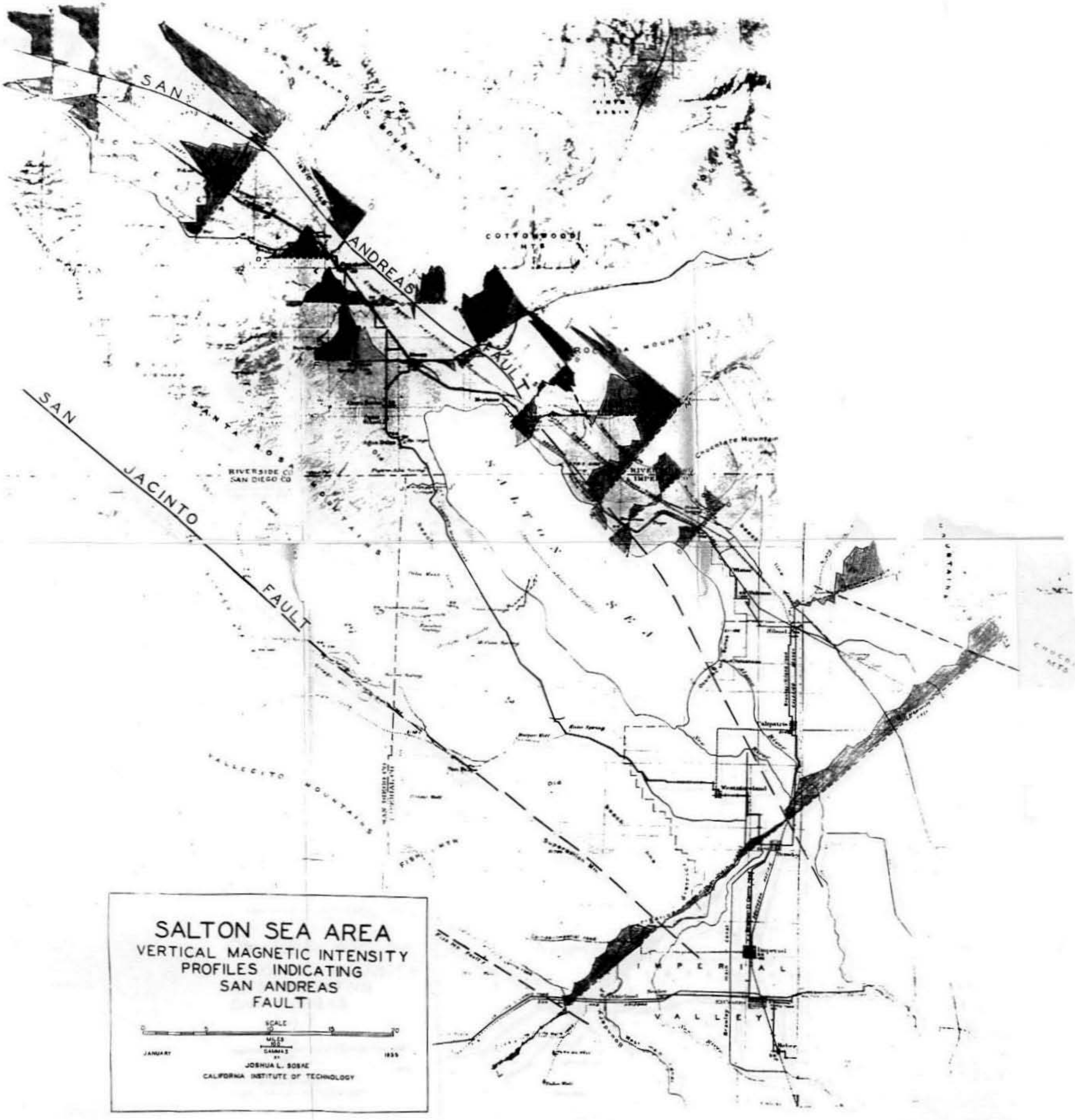

SALTON SEA AREA
VERTICAL MAGNETIC INTENSITY
PROFILES INDICATING
SAN ANDREAS
FAULT

JANUARY 1935

BY
JOSHUA L. SOSKE
CALIFORNIA INSTITUTE OF TECHNOLOGY

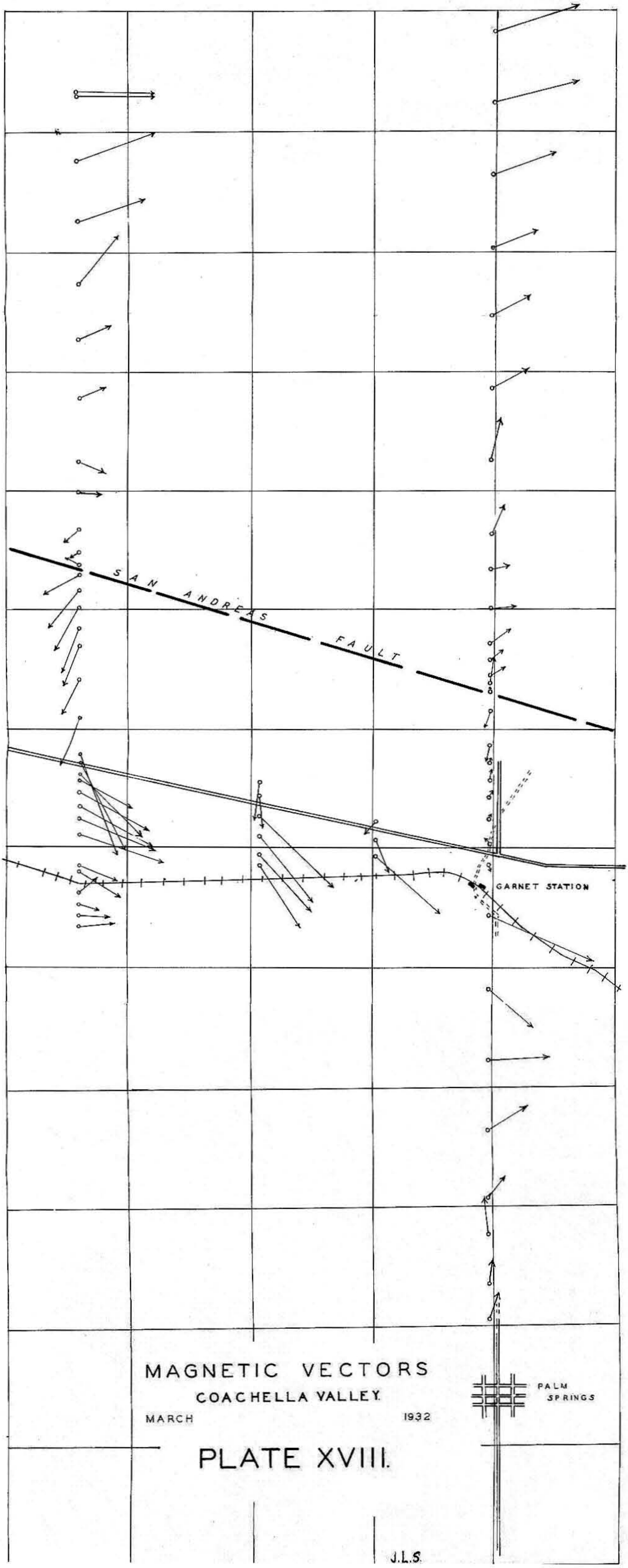

MAGNETIC VECTORS
COACHELLA VALLEY
MARCH 1932

PLATE XVIII.

J.L.S.

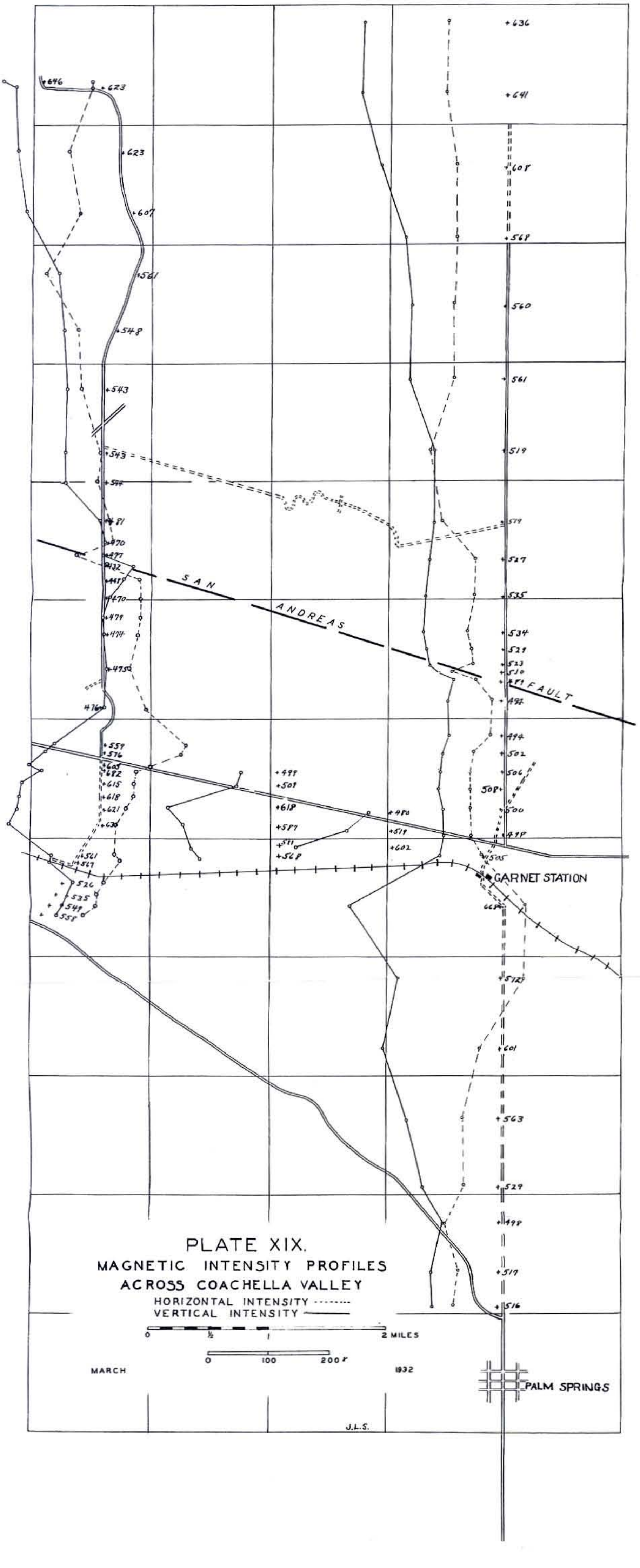

PLATE XIX.

MAGNETIC INTENSITY PROFILES ACROSS COACHELLA VALLEY

PLATE XX.

ISONOMALIC VERTICAL INTENSITY MAP
of
RHYOLITE BUTTES AREA
SALTON SEA

March 1935

SCALE 1 MILE

Legend

Isonomalic Interval 10 Gammas

▦ *100 and 200 Gamma Interval*

▨ *Vertical Intensity above 950 Gamma*

~ J. L. SOSKE AND V. C. KELLEY ~