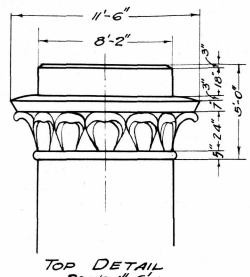

TOP DETAIL
Scale 1"=6'

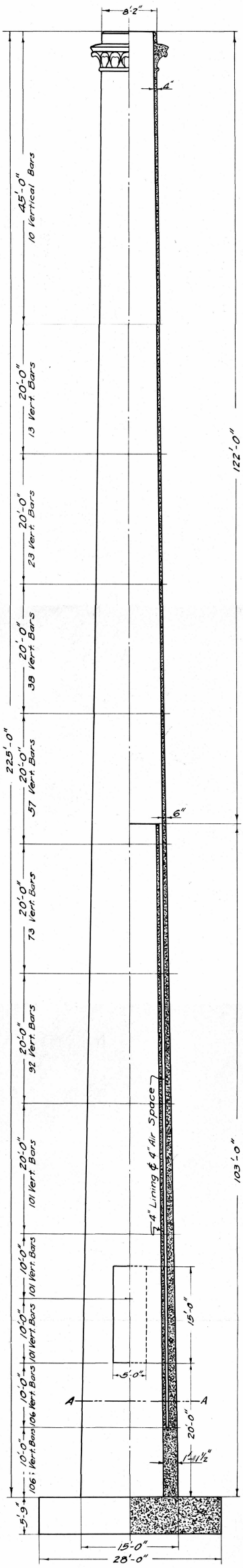

ELEVATION
Scale 1"=10'

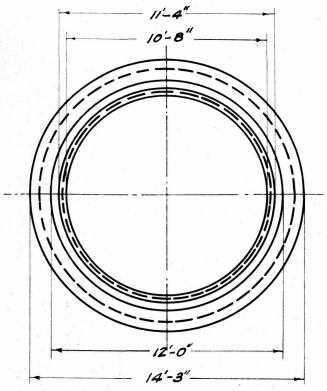

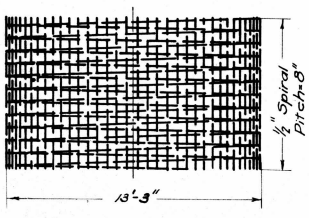

SECTION A-A
AND
REENFORCING
Scale=1"=5'

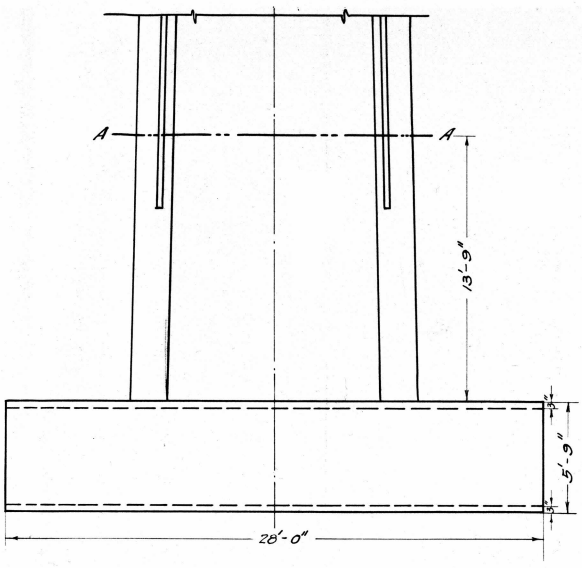

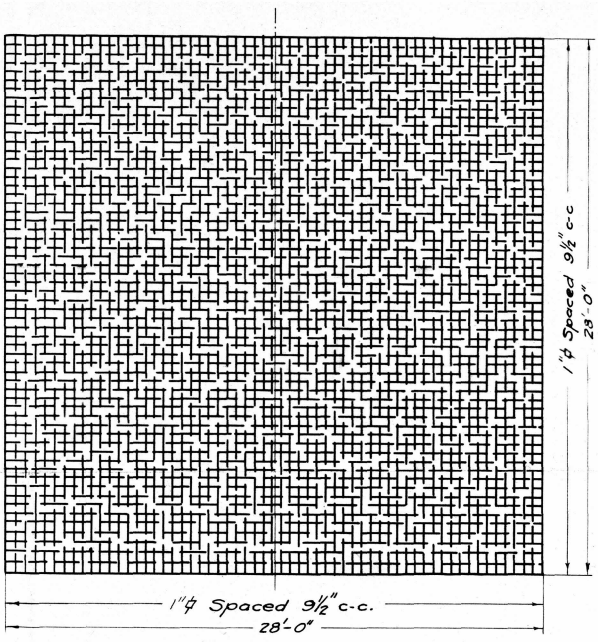

FOOTING & REENFORCING
Scale=1"=5'

Weight of outer shell = 837,700 lbs.
Weight of inner shell = 162,800 lbs.
Weight of footing = 677,000 lbs.
TOTAL WEIGHT = 1,677,500 lbs.

Volume of outer shell = 207 cu. yds.
Volume of inner shell = 40 cu. yds.
Volume of footing = 167 cu. yds.
TOTAL VOLUME = 414 cu. yds.

All vertical reinforcing to be ¾"φ
All concrete to be 1:2:3 mix.
Outer shell spiral steel to be ½"φ. Inner shell spiral to be ⅜"φ.
Extreme bearing pressure = 4280# per sq. ft.

REENFORCED CONCRETE CHIMNEY

DESIGNED TO FURNISH DRAFT FOR A 2000 H.P. PLANT

DESIGNED AND DRAWN BY
L. M. MILLER

JUNE 1925